ORDER NO. EOS-08-1018

Service Manual

Electronic Organ

SX-U50

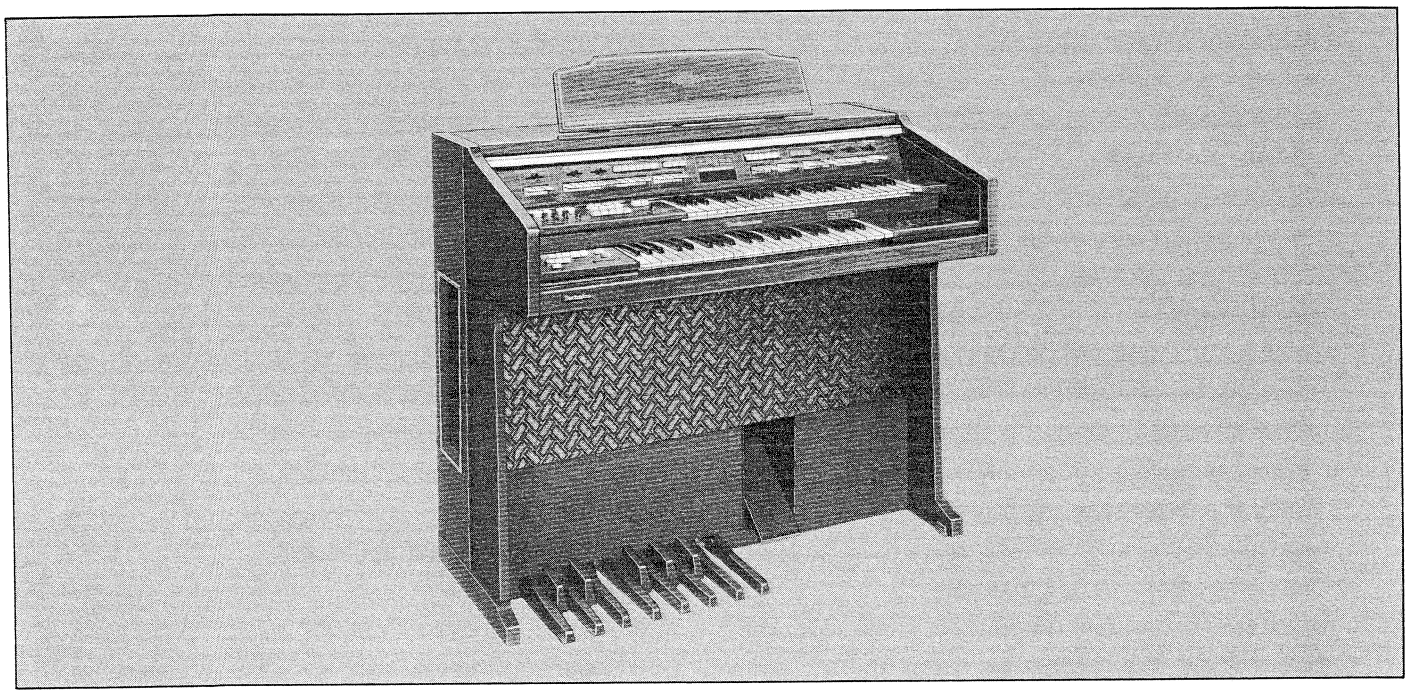

Specifications

Keyboards
- Upper Manual: 44 Keys f∼c⁴ ($3^2/_3$ Octaves)
- Lower Manual: 44 Keys F∼c³ ($3^2/_3$ Octaves)
- Pedal Keyboard: 13 Keys C∼c (1 Octaves)

Orchestral Conductor
- Upper: Tab Voices, String Ensemble, Orchestral Presets, Percussive Presets, Solo Synthe Presets

Upper Tones
- Tab Voices: Flute 16′, 8′, 4′, $2^2/_3$′, 2′, Brass 16′, Oboe 8′, String 8′, 4′
- Percussive Tone.....4′, $2^2/_3$′, Full, Long
- String Ensemble: Volume
- Orchestral Presets: Wah Brass, Clarinet, Accordion, Saxophone, Trombone, Full.....Harmonic Control
- Percussive Presets: Piano, Harpsichord, Vibraphone, Mandoline, Full
- Solo Synthe Presets: Violin, Trombone, Saxophone.....Pitch, Volume

Lower Tones
- Tab Voices: Flute 8′, 4′, Diapason 8′, Horn 8′, Cello 8′
- String Ensemble: Tablet.....Volume

Pedal Tones: Bass 16′, 8′, Bass Guitar.....Volume

Effects
- Harmonic Coupler: Upper.....On, $2^2/_3$′/$5^1/_3$′ Lower.....2′
- Sustain (Tablet): Upper Sustain, Lower Sustain
  (Lever): Upper Sustain, Lower Sustain, Pedal Sustain
- Vibrato: On, Heavy, Delay
- Tremolo: Upper Tab Voices, Lower Tab Voices, Chorus/Tremolo.....Tremolo Speed
- Celeste: Upper Tab Voices, Orchestral Presets, Solo Synthe Presets, Lower Tab Voices
- Slow Attack: Upper
- Others: Reverberation, Brilliance, Manual Balance

Voice Setting Computer: Record, Combination, Composer I, Composer II, Cancel

Techni-Chord

Automatic Rhythm
- Rhythm Selectors: (Rhythm A/B) March/Rolling March, Swing/rumba, Rock I/Teenbeat, Rock II/Tango, Slow Rock/Ballade, Soul/Samba, Waltz/Jazz Waltz, Bossa Nova/Mambo
- Rhythm Controls: Synchro Start, Touch Switch, Rhythm Volume, Balance, Tempo

Fill-In: Fill-In & Intro

Rhythmic Accompaniment: Piano, Guitar.....Accompaniment Volume

Auto-Play-Chord: One Finger, Fingered, Memory, Cancel

Walking Bass

Symphonic Arpeggio: Voices.....Harp, Strings, Tempo...Fast, Pattern.....I/II, Arpeggio Volume

Program Chord Computer: Record, Recall, Program I, Program II, Reset (Battery Check), Forward Key, Back Key, End Key, Half Key, Whole Key

Others: Power Switch, Main Volume, Expression Pedal, Headphone Jack, Input Jack, Output Terminal, Microphone Jack (with Volume), Glide Control, Power Indicator

Maximum Output: 70W

Speakers: 30cm×1, 20cm×1, 6.5cm×1

Power Requirement: AC 120/220/240V 50/60Hz
AC 120V 60Hz.....Only for Canada

Power Consumption: 170W

Batteries: 1.5V Batteries×3 (for Memory Backup)

Cabinet Dimensions: 112.6cm(W)×58.3cm(D)×97.9cm(H)

Net Weight: (without bench) 63kg

Technics

Matsushita Electric Trading Co., Ltd.
P.O. Box 288, Central Osaka Japan

CONTENTS

LOCATION OF CONTROLS

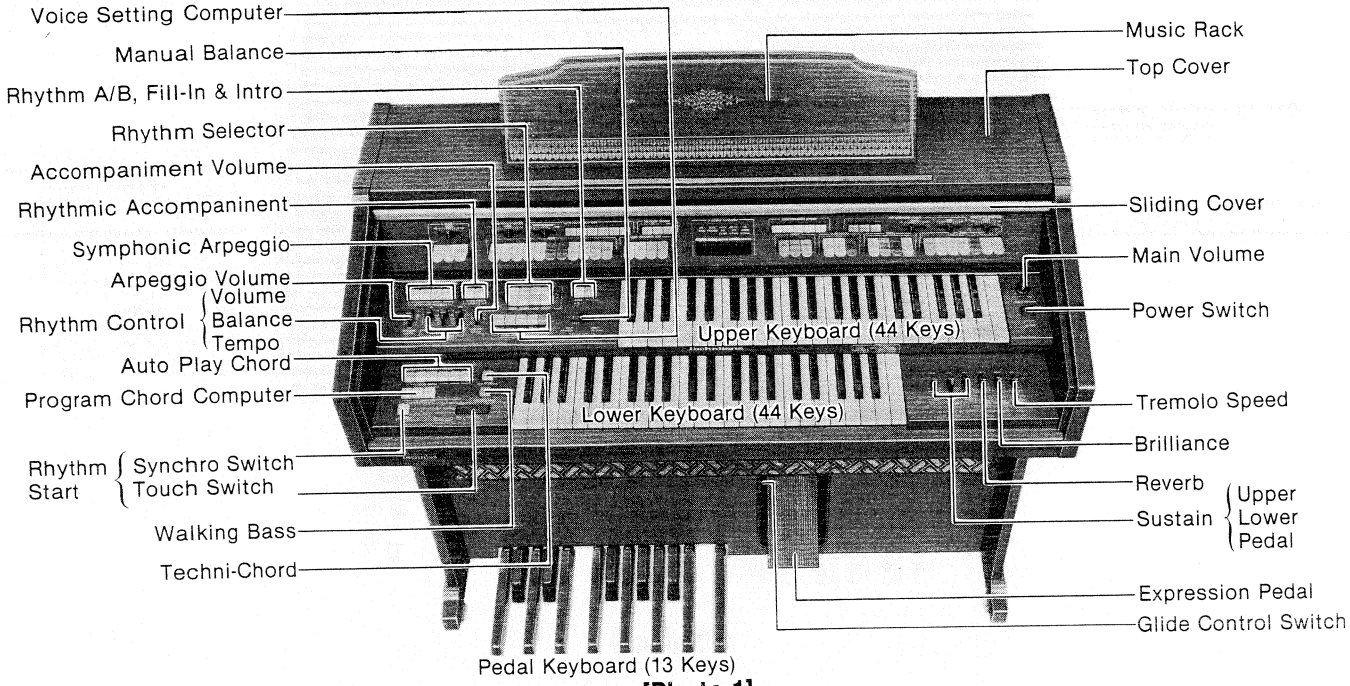

[Photo-1]

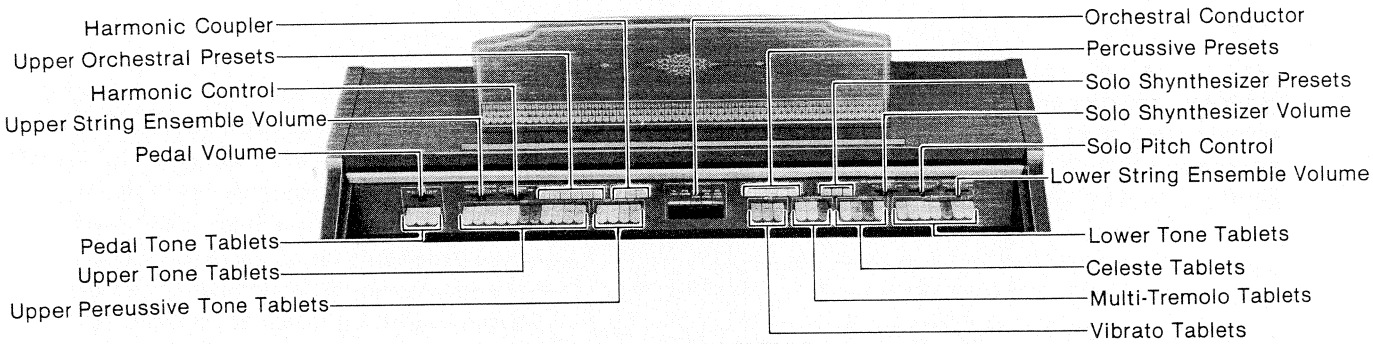

[Photo-2]

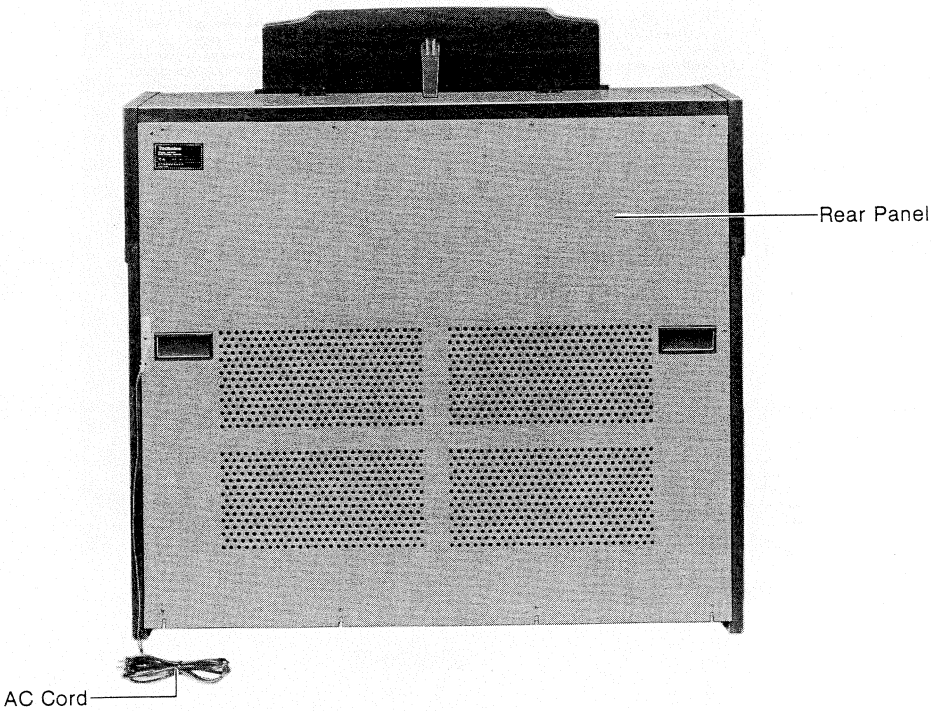

[Photo-3]

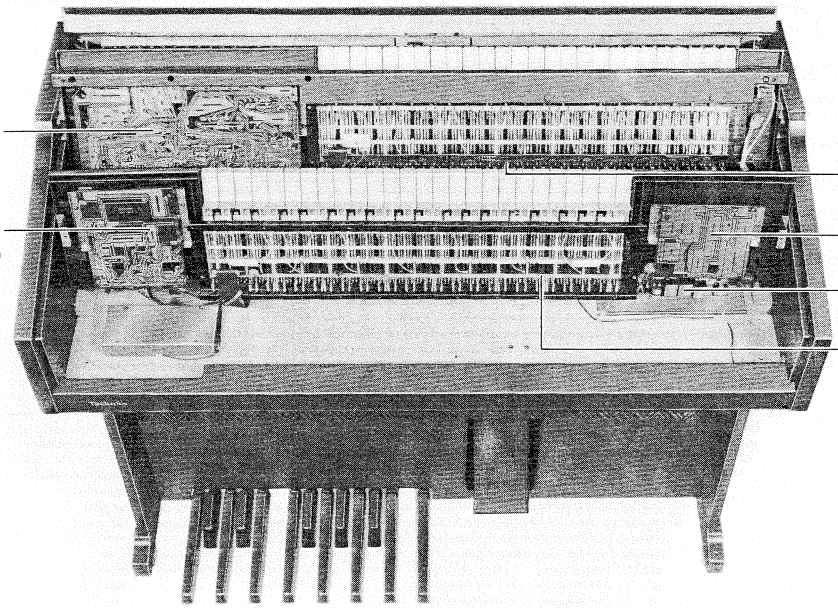

[Photo-4]

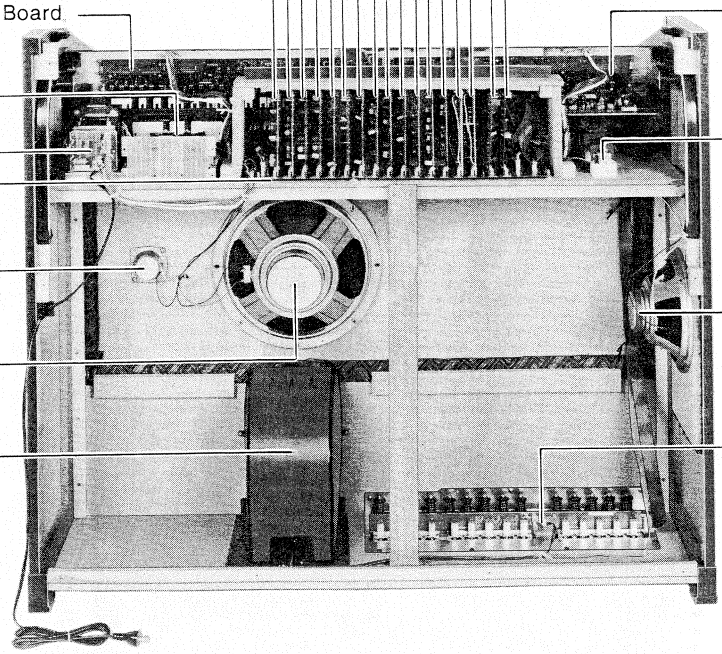

[Photo-5]

KEYBOARD RANGES

Upper Keyboard .....44 Keys f to c^4 ($3^2/_3$ Octaves)
Lower Keyboard .....44 Keys F to c^3 ($3^2/_3$ Octaves)
Pedal Keyboard .....13 Keys C to c (1 Octave)

※ An 8-feet compass is used for each keyboard.

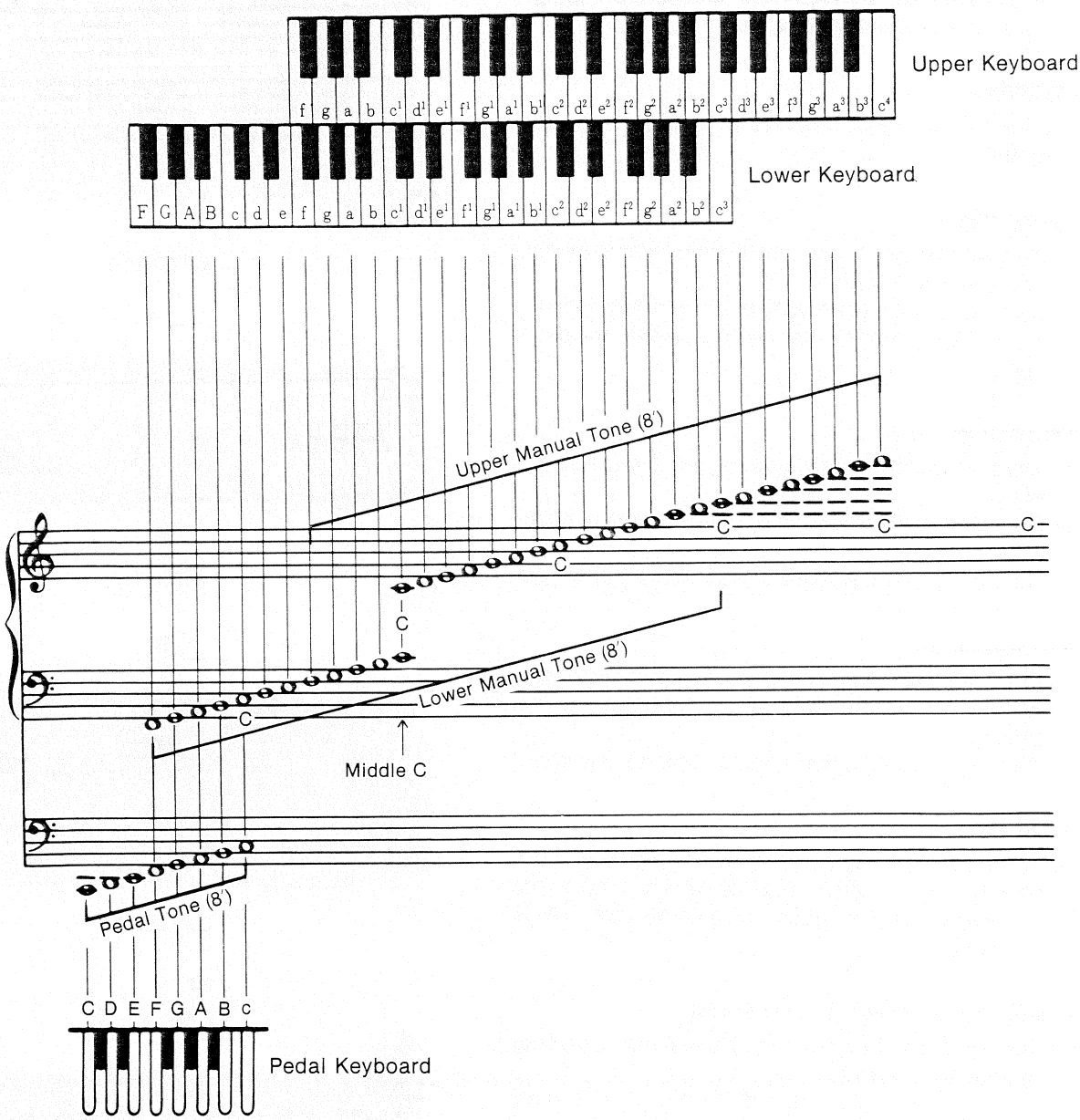

DISASSEMBLY INSTRUCTIONS

1. Top Cover

(a) Remove the 2 setscrews Ⓐ located on the right and left sides of the top cover.
(b) Remove the 2 setscrews Ⓑ and 4 setscrews Ⓒ located on the rear panel.
(c) The top cover can be removed upwards.

2. Sliding Cover

(a) After removing the top cover, remove the sliding cover in its fully-closed position.

3. Rear Panel

(a) Remove the 10 setscrews Ⓒ to detach the rear panel.

4. Control Panel

(a) Remove both top cover and sliding cover according to procedure 1 and 2.
(b) Remove the 2 setscrews Ⓗ at both sides of the control panel. Then the control panel can be opened upwards.

5. Upper Keyboard

(a) Open the control panel according to procedure 1, 2 and 4.
(b) Remove the 2 setscrews Ⓓ on the bottom of the shelf-board.
(c) Then the upper keyboard can be opened upwards.

6. Lower Keyboard

(a) Open the upper keyboard according to procedure 5.
(b) Remove the 4 setscrews Ⓔ on the bottom of the shelf-board.
(c) Then the lower keyboard can be opened upwards.

7. External Jack

(a) Open the upper keyboard according to procedure 5.
(b) Remove the 3 setscrews Ⓕ which secure the chassis of the jack. Then, the external jack can be removed.

8. Printed Circuit Board (Mother Board)

(a) Remove both top cover and sliding cover according to procedure 1 and 2.
(b) Remove the 4 setscrews Ⓗ on the right and left sides of the printed circuit board retainer plate.
(c) Each printed circuit board can be removed from the connector of the mother board.

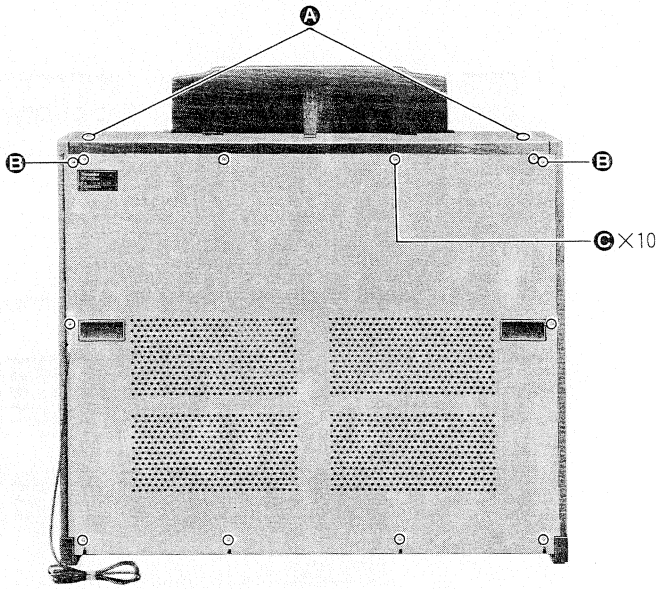

[Photo-6]

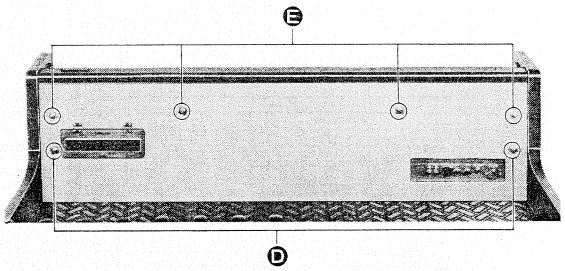

[Photo-7]

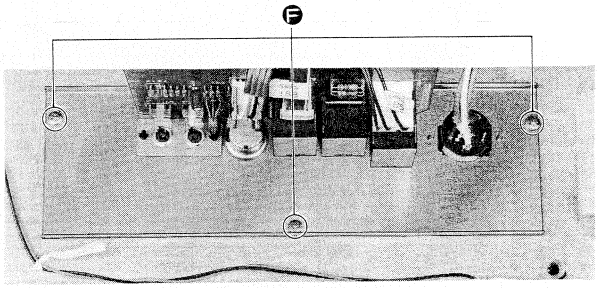

[Photo-8]

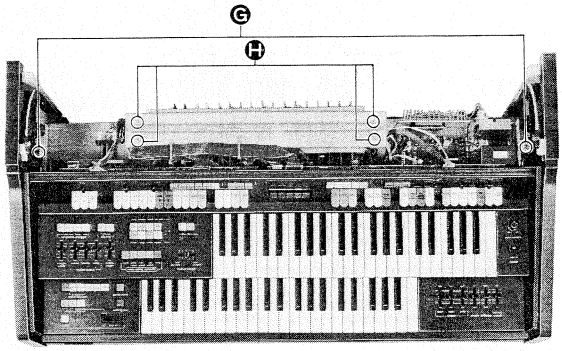

[Photo-9]

9. Expression Unit

(a) Remove the rear panel according to procedure 3.
(b) Remove the 3 setscrews which secure the expression case. The expression case can be removed.
(c) The expression unit can be detached by removing the 4 setscrews ❶.
(d) when replacing the expression lamp, remove the lamp retainer rubber and detach the lamp from the socket.

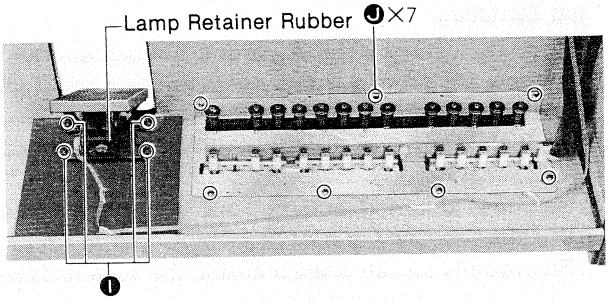

[Photo-10]

10. Pedal Keyboards

(a) Remove the rear panel according to procedure 3.
(b) Remove the 7 setscrews ❍ which secure the pedal keyboard chassis.
(c) Lift the cabinet body, and remove the pedal keyboard from the bottom plate of the cabinet.

11. Removing Manual Keys

(a) Open the manual keyboard according to procedure 5 and 6.
(b) As shown in Fig.-1, introduce the key-remover tool vertically between the notches of the manual key that is going to be removed. Move the key-remover tool in the keyboard direction until the notches move enough to disengage from the chassis holes. (The black keys may be removed, after the white keys to either side have been removed, by pulling the front part of the key.)

★ If the key-remover tool is not available, the key can be removed by pulling the front part of the key and disengaging it from the chassis while spreading each notched leg outwards.

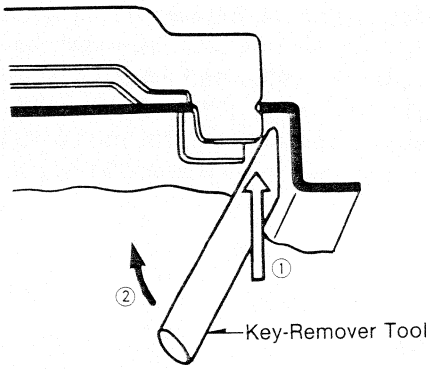

[Fig.-1]

12. Installation of Manual Keys

(a) Mount spring "A" on the keyboard chassis.
(b) Set the key into the key guide and the actuator into the hole in the chassis.
(c) Press the key in the direction indicated by Ⓑ in Fig.-2 so that the key pushes down on the spring "A".
(d) While pushing in direction Ⓑ, pull key towards you so that the key notches engage in the chassis holes.
(e) The key is correctly installed when the notches of the key are engaged in the chassis holes.

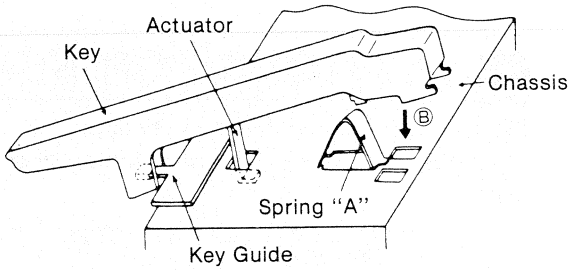

[Fig.-2]

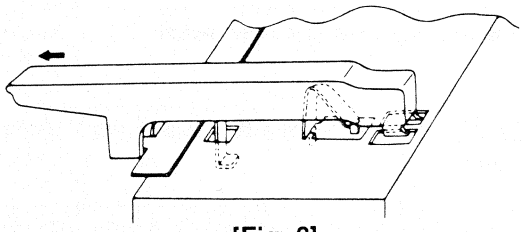

[Fig.-3]

13. Manual Keyboard Switch Unit

(a) Remove the setscrews of the switch unit on the back of the manual keyboard.
(b) Unsolder the printed board and pull out the switch unit.

14. Control Knobs, Buttons

(a) All knobs and buttons can be pulled out. (It is advisable to use a string to remove knobs and buttons.)

15. Tang Switches

(a) Open the control panel according the procedure 4.
(b) Remove the printed circuit board on the back of the control panel.
(c) Shift the tang switch lever down, and remove the damper.
(d) Remove the spring, and the lever from the chassis.
(e) Unsolder the switch lead leg.
(f) Remove the switch while pressing the switch claws inwards as in Photo-11-Ⓐ.

16. Orchestral Conductor Switches

(a) Open the control panel according to procedure 4.
(b) Remove the printed circuit board on the right side of the back of the control panel.
(c) The button switch can be pulled out.
(d) To remove the LED, unsolder the printed circuit board, and then pull out the LED upwards.
(e) To remove the switch, unsolder the printed circuit board, and pull out the switch while pressing the switch claws inwards as in Photo-11-Ⓑ.

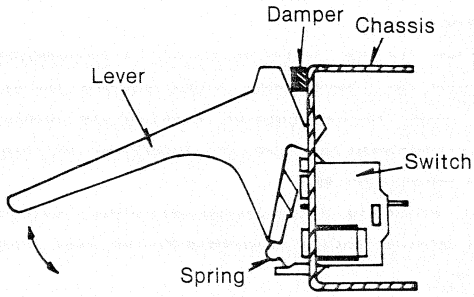

[Fig.-4]

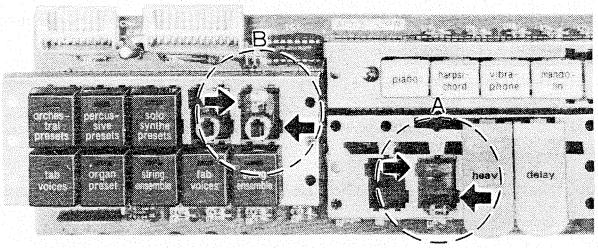

(Photo: SX-U60) [Photo-11]

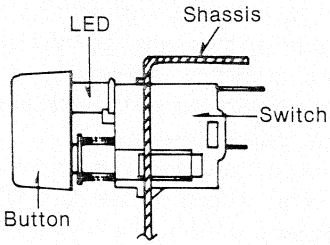

[Fig.-5]

PRECAUTIONS FOR REPAIR

■ Troubles often occur due to faulty operation of your electronic organ if you are not completely familiar with its mechanisms. Therefore, if your organ shows the following symptoms, please check the instrument before repair.

Symptoms	Causes and Measures
Bass is high-pitched, and treble is low-pitched.	Electronic organs are tuned by integral overtones since the overtone composition is integer-multiple. However, human ears feel the bass of pedal keyboard a little higher-pitched, and the treble of upper keyboard a little lower-pitched.
No sound is produced except rhythm.	No sound is produced if the "composer" button of the voice setting computer is turned on with nothing stored in the memory. In that case, push the cancel button.
Upper and lower keyboards produce no sound.	No sound is produced if the tone tablets and buttons of the group which lights up in the orchestral conductor are not turned on. Turn on the desired tablets and buttons.
Pedal keyboards, string ensemble, and solo synthe presets produce no sound.	Control knobs are provided for producing these sounds. No sound is produced with the knobs set an "0". Set them to the desired volume positions.
Neither lower keyboards nor pedal keyboard produces sound.	If the "recall" button is turned on while no chord is memorized in the program chord computer, neither lower keyboard nor pedal keyboard produces sound. Turn off the "recall" button by pushing the "cancel" button.

Symptoms	Causes and Measures
Only 8 tones are produced when 9 or more keys of the upper keyboard or lower keyboard are simultaneously pressed.	It is designed so that the upper and lower keyboards can produce only up to 8 tones necessary for playing. The 8 keys are given priority over high-pitched tones.
Upper keyboard or lower keyboard produces only up to 4 tones.	with the harmonic coupler turned on, only up to 4 tones can be simultaneously produced by the keyboard.
Pedal keyboard and/or lower keyboard keep sounding.	This trouble occurs when either "one-finer" or "fingered" button of the auto play chord, and "memory" button are turned on. Set the "memory" button to OFF.
When two keys of pedal keyboard are pressed at the same time, only one tone is produced.	If the pedal keyboard keys are depressed fast, the produced sound becomes flat due to mixture of tones. To prevent this, it is designed so that the previous tone is cancelled on depression of other key. When two or more keys are depressed simultaneously, the lowest tone will be produced. (Bass priority)
• Different tones cannot be obtained by changing tone tablets or buttons. **• Different effects cannot be obtained by changing effect tablets.**	When the voice setting computer is selected, changing the tone tablets or buttons and the effect tablets gives no change. To achieve new tones or effects, push the "cancel" button of the voice setting computer or the upper orchestral conductor button.
Tone tablet sound is not given sustain even when sustain tablet is activated.	In orchestral conductor, the sustain tablet works only for tab voices and percussive presets. When the other buttons are selected, the sustain automatically becomes ineffective so that the instrument is kept in optimum conditions.
Tone tablet sound is not given vibrato even when vibrato tablet is activated.	In upper orchestral conductor, when other than tab voices (such as orchestral presets, percussive presets, string en semble) are activated, the vibrato tablet automatically becomes ineffective so that the instrument is kept in optimum conditions.
Chorus, tremolo and celeste do not always work when activated.	It is designed so that the characteristic of each individual tone is best used.
It is hard to apply brilliance effect to flute sounds.	Flute sounds are very beautiful and soft, using less overtone. Since the brilliance effect is intended to regulate the overtone of treble range, it is not so much applied to flute sounds as compared with string sounds that contain much more overtone.
Manual balance lever does not work for sounds other than tab voices.	The lever is set so that it is most effective when used individually or in combination.
Rhythm does not start even when accompaniment is played with "synchro" start button depressed.	Rhythm does not start if the "record" button of program chord is turned on. Turn off the button by pushing the "cancel" button.
Fill-in seems to be out of order.	It is because "fill-in" is given instantaneously when the "fill-in and intro" button is turned on. However, there is no chance of getting out of order because "fill-in" is terminated at the end of a bar.
During auto accompaniment, sounds other than the rhythmic accompaniment are not played in rhythm.	It is because the sounds are given more orchestral effects in this way.
Nothing is stored in the memory when program chord computer is used.	• Check that the "record" button is on. Pushing the "one-finger" or "fingered" button causes the "record" button to turn off, making it impossible to memorize. • Do not release the left hand (chord) before pushing the "whole" or "half" key.

MEASUREMENTS AND ADJUSTMENTS

ADJUSTMENT	SETTING	METER USED	ADJUSTMENT CIRCUIT BOARD	ADJ. POINT	CONNECT METER TO	METER READING
Expression characteristics	orchestral conductor...tab voices upper tone tab .....flute 16′ flute 8′ flute 4′ main volume .....max brilliance.....bright upper keyboard C3, E3, G3	High impedance voltmeter (VTVM)	Reverb, Mixing Circuit	VR2	30cm Speaker	40±5dB
		Make the expression pedal maximum, and set the high impedance voltmeter to 0dB by the manual balance lever. Next, adjust VR2 so that the range of alteration is 40dB when the expression pedal is minimum.				
Manual level (channel 1)	orchestral conductor...tab voices upper tone tab .....flute 16′ flute 8′ flute 4′ manual balance .....upper brilliance.....bright main volume .....max expression pedal .....max upper keyboard C3, E3, G3	High impedance voltmeter (VTVM)	Reverb Mixing Circuit	VR3	30cm Speaker	4±0.3Vrms
Manual level (channel 2)		High impedance voltmeter (VTVM)	Reverb Mixing Circuit	VR4	20cm Speaker	2.5±0.2Vrms
Pedal level	pedal tone tab .....bass 8′ main volume .....max expression pedal .....max pedal volume .....max pedal sustain .....short pedal keyboard .....A1 key	High impedance voltmeter (VTVM)	Pedal Tone Filter Circuit	VR1	30cm Speaker	11±1Vrms
Reverb depth	orchestral conductor...tab voices upper tone tab .....flute 16′ flute 8′ flute 4′ brilliance.....bright manual balance .....upper main volume .....max expression pedal .....max vibrato.....on upper keyboard .....C3~C4 (only for natural key)	High impedance voltmeter (VTVM)	Reverb Mixing Circuit	VR1	20cm Speaker	4±0.3Vrms
		Remove C16 (0.068μ) of the reverb mixing circuit. Connect the VTVM to 20cm speaker and then adjust VR1 so that the VTVM indicates 4 Vrms.				
Solo synthe presets VCF adjustment	orchestral conductor...solo synthe presets trumpet .....on	Oscilloscope	Solo 1 Circuit	VR1	30cm Speaker	max
		Apply 420Hz sine wave to IC2 (terminal ①) of solo 2 circuit. Adjust VR1 of solo 1 circuit so that the output waveform of 30cm speaker terminal is maximized.				
Percussive tone click adjustment	orchestral conductor...tab voices percussive tone .....full manual balance.....upper main volume .....max expression pedal .....max upper keyboard .....on/off (repeating)	Oscilloscope	Upper Orchestral Filter Circuit	VR1	30cm Speaker	Under 30mVp-p
		Adjust VR1 so that the click waveform on the oscilloscope is minimized when the upper keyboard is turned on/off.				
Rhythmic accomp click adjustment	rhythm.....start rhythm volume .....min accomp volume .....max main volume .....max expression pedal .....max	Oscilloscope	Lower Tone Filter Circuit	VR1	30cm Speaker	under 30mVpp
		Adjust VR1 so that the click waveform on the oscilloscope is minimized.				

ADJUSTMENT	SETTING	METER USED	ADJUSTMENT CIRCUIT BOARD	ADJ. POINT	CONNECT METER TO	METER READING
Percussive pressets click adjustment	orchestral conductor...percussive preset percussive presets.....mandolin full main volume .....max expression pedal .....max rhythm.....start rhythm volume .....min	Oscilloscope	Percussive Presets Circuit	VR1	30cm Speaker	Under 30mVpp 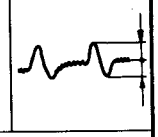
		Adjust VR1 so that the click waveform on the oscilloscope is minimized.				
Tuning (manual)	orchestral conductor...tab voices upper tone tab .....brass 16′ pedal tone tab .....bass 8′ upper keyboard .....C3 key pedal keyboard .....C2 key	Oscilloscope	System Assigner 2 Circuit	L1	30cm Speaker	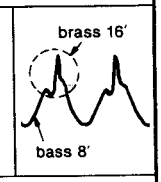
	When C3 key of upper keyboard and C2 key of pedal keyboard are simultaneously pressed, a waveform appears on the oscilloscope as shown at right, where the bass 8′ of pedal tablet and brass 16′ of upper tablet are superposed. Then, the point when the brass 16′ wave starts moving to the right is the adjusting point. **Note)** The wave form varies depending on the timing of pressing the keys. The point when the wave of brass 16′ is slightly deflected from the sine wave of bass 8′ is the adjusting point.					
Tuning (solo)	orchestral conductor...solo synthe presets solo synthe presets ...saxophone pedal tone tab .....bass 8′ upper keyboard .....C3 key pedal keyboard .....C2 key	Oscilloscope	Solo 2 Circuit	VR2 (L1)	30cm Speaker	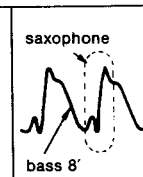
	When C3 key of upper keyboard and C2 key of pedal keyboard are simultaneously pressed, a waveform appears on the oscilloscope as shown at right, where the bass 8′ of pedal tablet and the saxophone of solo presets are superposed. Then, the point when the saxophone wave starts moving to the left is the adjusting point. **Note)** Since saxophone is given delay vibrato, turn the upper keyboard on/off intermittently. The waveform varies depending on the timing of pressing the keys. The point when the wave of saxophone is slightly deflected from the sine wave of bass 8′ is the adjusting point.					
Vibrato speed (manual)	Vibrato.....on	Frequency counter	System Assigner 2 Circuit	VR2	VR2 Center Pin	6±0.5Hz
Vibrato depth (manual)	Vibrato.....on Vibrato depth .....heavy	Oscilloscope	System Assigner 2 Circuit	VR1	Q2 Collector	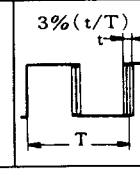
	Connect the oscilloscope to Q2 collector of the system assigner 2 circuit. Adjust VR1 of the system assigner 2 circuit so that the periodical alteration (t) with vibrato turned on is 3% assuming that period (T) of the rectangular wave on the oscilloscope is 100%.					
Vibrato speed (solo)	orchestral conductor...solo synthe presets solo synthe presets ...saxophone	Frequency counter	Solo 2 Circuit	VR1	IC6 terminal ①	5±0.2Hz
Vibrato depth (solo)	orchestral conductor...solo synthe preset solo synthe presets ...saxophone	Oscilloscope	Solo 2 Circuit	VR3	Q1 collector of the solo 1 circuit	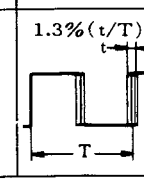
	Connect the oscilloscope to Q1 collector of the solo 1 circuit. Adjust VR3 of the solo 2 circuit so that the periodical alteration (t) with vibrato turned on is 1.3% assuming that period (T) of the rectangular wave on the oscilloscope is 100%.					

ADDRESS MAP TABLE

ADDRESS		SITUATION OF DECODER	BUS INPUT / OUTPUT	INPUT/OUTPUT BUS NUMBER						REMARKS
				I/O B5	I/O B4	I/O B3	I/O B2	I/O B1	I/O B0	
0	0	MKB (upper)	IN	C6						upper keyboard
	1			F#5	G5	G#5	A5	A#5	B5	
	2			C5	C#5	D5	D#5	E5	F5	
	3			F#4	G4	G#4	A4	A#4	B4	
	4			C4	C#4	D4	D#4	E4	F4	
	5			F#3	G3	G#3	A3	A#3	B3	
	6			C3	C#3	D3	D#3	E3	F3	
	7			F#2	G2	G#2	A2	A#2	B2	
	8	RHY	IN						F2	
	9			march	rock I	rock II	swing	bossanova	soul	rhythm selector
	A			waltz	slow rock	tango	rumba	mambo	samba	
	B			record	cancel		cambi-nation	composer II	composer I	voice setting computer
	C			arpeggio fast	arpeggio II	fill-in & intro		variation		rhythm control
	D		OUT	bass drum	snare drum	hi-hat (accent)	rhythmic accomp		hi-hat (closed)	rhythm output
							short	long		
	E			maracas	rimshot / claves	high bongo	low bongo	low canga	cow bell	
	F			low conga / claves	snar drum rolling	cavasa	hi-hat (opened)	fill-in lamp	tempo lamp	
1	0	MKB (lower)	IN	C5						lower keyboard
	1			F#4	G4	G#4	A4	A#4	B4	
	2			C4	C#4	D4	D#4	E4	F4	
	3			F#3	G3	G#3	A3	A#3	B3	
	4			C3	C#3	D3	D#3	E3	F3	
	5			F#2	G2	G#2	A2	A#2	B2	
	6			C2	C#2	D2	D#2	E2	F2	
	7			F#1	G1	G#1	A1	A#1	B1	
	8	APCS	IN						F1	
	9			C2			touch switch	synchro switch	foot switch	rhythm start pedal keyboard
	A			F#1	G1	G#1	A1	A#1	B1	
	B			C1	C#1	D1	D#1	E1	F1	
	C									
	D									
	E			program II	program I	record	fingered	one-finger	recall	auto-play-chord control
	F			techni-chord		normal bass	memory		reset	

ADDRESS		SITUATION OF DECODER	BUS INPUT / OUTPUT		INPUT/OUTPUT BUS NUMBER						REMARKS
					I/O B5	I/O B4	I/O B3	I/O B2	I/O B1	I/O B0	
2	0	CPL	IN								
	1								slow attack	sustain	upper envelope control
	2						$2^2/_3'$	4′	full	long	upper percussive tone
	3					lower 2′		upper $5^1/_3'$	upper $2^2/_3'$		harmonic coupler
	4				saxophone	accordion	clarinet	trombone	wah brass		orchestral prests
	5				upper string ensemble II	orchestral preset full	bass guitar	tuba 16′	bass 8′	bass 16′	bass tablets, others
	6						string 4′	string 8′	oboe 8′	brass 16′	upper tone tablets
	7				flute 1′	flute 2′	flute $2^2/_3'$	flute 4′	flute 8′	flute 16′	
	8	CPR	IN		string 4′	cello 8′	horn 8′	diapason 8′	flute 4′	flute 8′	lower tone tablets
	9				percussive preset full	tremolo	vibrato				vibrato control
							on	delay	heavy		
	A				orchestral preset celeste	solo celeste	lower tab celeste	lower tab tremolo	upper tab celeste	upper tab tremolo	sound effect selector
	B						mandolin	vibraphone	harpsi-chord	piano	percussive presets
	C				cosmic wah	jazz flute	trampet	saxophone	trombone	violin	solo synthesizer presets
	D					sustain					lower envelope control
	E				organ presets	tab voices	string ensemble	solo synthe presets	percussive presets	orchestral presets	upper orchestral conductor
	F					tab voices	string ensemble	solo synthe presets	percussive presets		lower orchestral conductor
3	0	SAS2	OUT	15V	upper string ensemble II	orchestral preset full	bass guitar	tuba 16′	bass 8′	bass 16′	bass tablets, others
	1			15V			string 4′	string 8′	oboe 8′	brass 16′	upper tablets
	2			15V	flute 1′	flute 2′	flute $2^2/_3'$	flute 4′	flute 8′	flute 16′	
	3			15V	string 4′	cello 8′	horn 8′	diapason 8′	flute 4′	flute 8′	lower tablets
	4			15V	percussive preset full	tremolo	lower string ensemble on	upper string ensemble on		upper percussive preset on	other controls
	5			15V	orchestral preset celeste	solo celeste	lower tab celeste	lower tab tremolo	upper tab celeste	upper tab tremolo	sound effect selector
	6			15V	solo presets key data					solo data change	solo synthe presets control
					BP3	BP2	BP1	BP0			
	7			15V			$2^2/_3'$	4′	full	long	percussive tone
	8	SAS2	OUT								
	9			15V	saxophone	accordion	clarinet	trombone	wah brass		orchestral presets
	A			15V			mandolin	vibraphone	harpsichord	piano	percussive presets
	B			15V	cosmic wah	jazz flute	trampet	saxophone	trombone	violin	solo synthesizer presets
	C				organ presets	tab voices	string ensemble	solo synthe presets	percussive presets	orchestral presets	upper orchestral conductor display
	D					tab voices	string ensemble	solo synthe presets	percussive presets		lower orchestral conductor display
	E				record	cancel		combina-tion	composer II	composer I	voice setting computer display
	F			15V	percussive preset key down	upper key down	bisy		percussive preset trigger		key down status

MEMO

SX-U50 BLOCK DIAGRAM

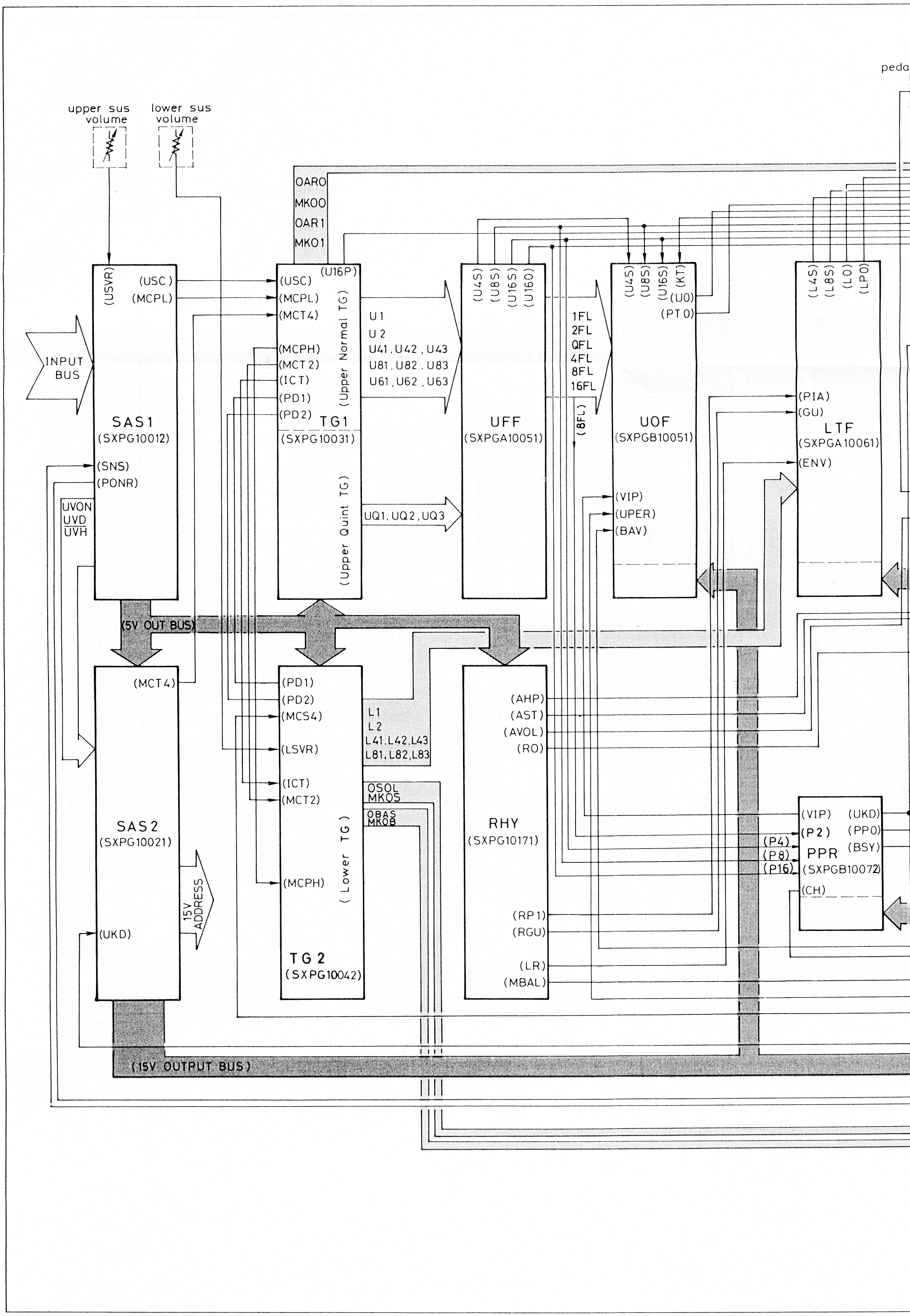

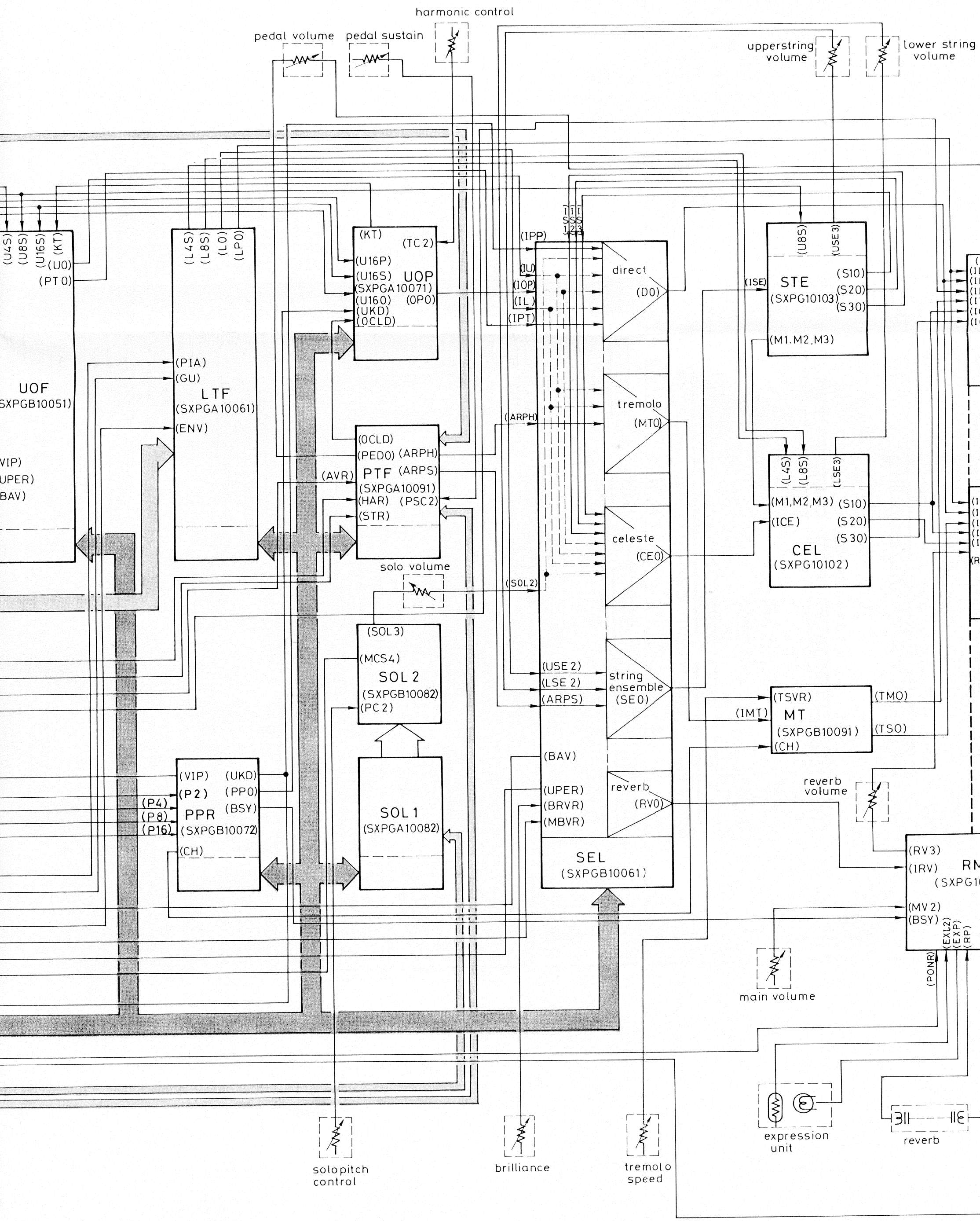
harmonic control
pedal volume
pedal sustain
upperstring volume
lower string volume
UOF
(SXPGB10051)
(U4S)
(U8S)
(U16S)
(KT)
(U0)
(PT0)
(VIP)
(UPER)
(BAV)
LTF
(SXPGA10061)
(L4S)
(L8S)
(L0)
(LP0)
(PIA)
(GU)
(ENV)
UOP
(SXPGA10071)
(KT)
(TC2)
(U16P)
(U16S)
(U160)
(UKD)
(OCLD)
(OP0)
PTF
(SXPGA10091)
(OCLD)
(PED0)
(ARPH)
(ARPS)
(AVR)
(HAR)
(PSC2)
(STR)
solo volume
(SOL2)
SOL 2
(SXPGB10082)
(SOL3)
(MCS4)
(PC2)
SOL 1
(SXPGA10082)
PPR
(SXPGB10072)
(VIP)
(UKD)
(P2)
(PP0)
(P4)
(BSY)
(P8)
(P16)
(CH)
(IPP)
(IU)
(IOP)
(IL)
(IPT)
(ARPH)
(SOL2)
(USE2)
(LSE2)
(ARPS)
(BAV)
(UPER)
(BRVR)
(MBVR)
SEL
(SXPGB10061)
direct
(D0)
tremolo
(MT0)
celeste
(CE0)
string ensemble
(SE0)
reverb
(RV0)
STE
(SXPG10103)
(U8S)
(USE3)
(ISE)
(S10)
(S20)
(S30)
(M1.M2,M3)
CEL
(SXPG10102)
(L4S)
(L8S)
(LSE3)
(M1,M2,M3)
(ICE)
(S10)
(S20)
(S30)
MT
(SXPGB10091)
(TSVR)
(IMT)
(CH)
(TMO)
(TSO)
reverb volume
RM
(SXPG1
(RV3)
(IRV)
(MV2)
(BSY)
(PONR)
(EXL2)
(EXP)
(RP)
main volume
expression unit
reverb
solopitch control
brilliance
tremolo speed

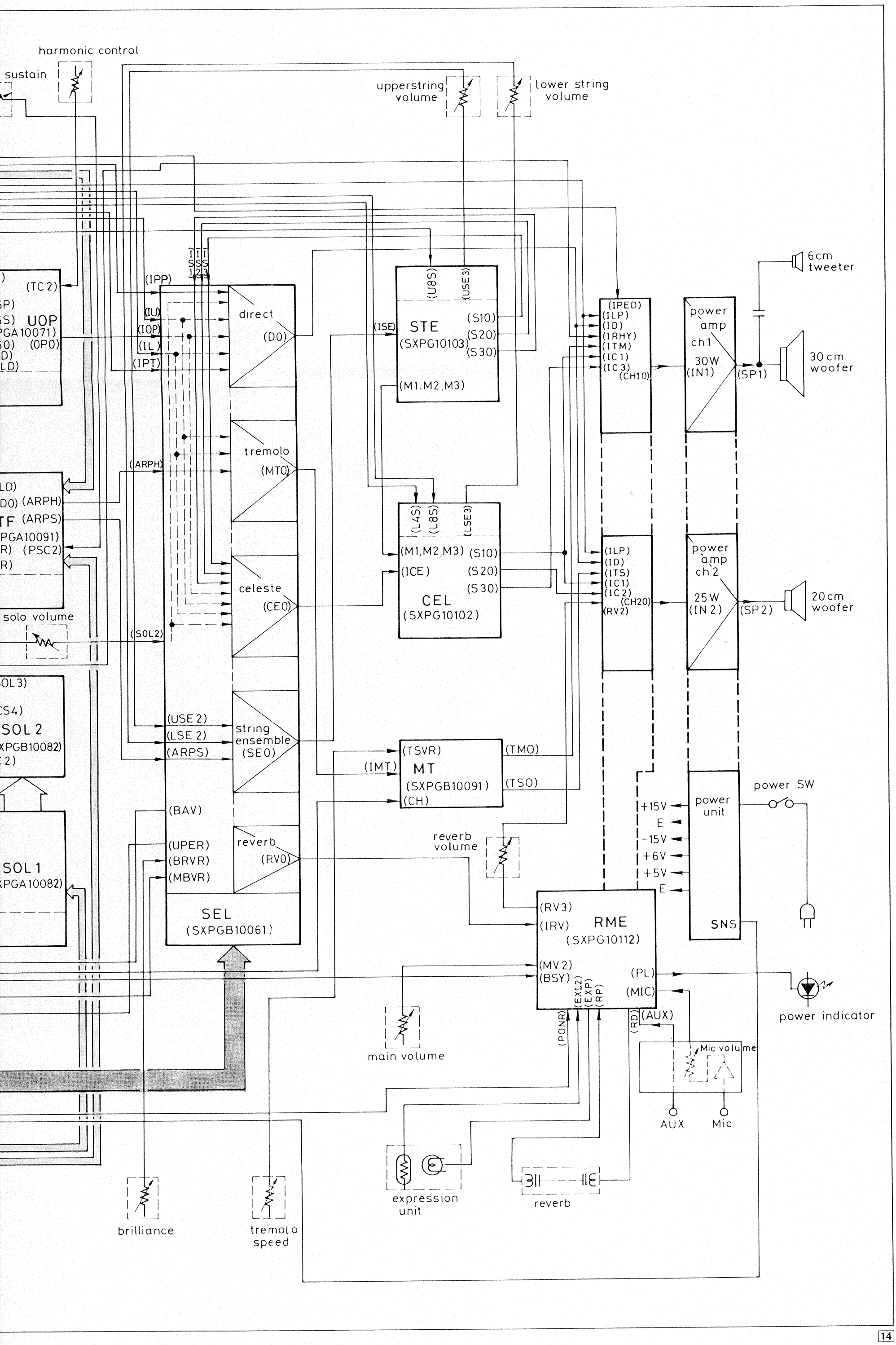
harmonic control
sustain
upperstring volume
lower string volume
(TC2)
UOP
(OPO)
(IPP)
(IU)
(IOP)
(IL)
(IPT)
direct
(DO)
tremolo
(MTO)
(ARPH)
(ARPS)
(PSC2)
solo volume
(SOL2)
celeste
(CEO)
(USE2)
(LSE2)
(ARPS)
string ensemble
(SEO)
(BAV)
(UPER)
(BRVR)
(MBVR)
reverb
(RVO)
SEL
(SXPGB10061)
SOL 2
SOL 1
(U8S)
(USE3)
STE
(SXPG10103)
(S10)
(S20)
(S30)
(ISE)
(M1.M2,M3)
(L4S)
(L8S)
(LSE3)
(M1,M2,M3)
(ICE)
CEL
(SXPG10102)
(TSVR)
MT
(SXPGB10091)
(CH)
(IMT)
(TMO)
(TSO)
reverb volume
(RV3)
(IRV)
RME
(SXPG10112)
(MV2)
(BSY)
(PL)
(MIC)
(EXL2)
(EXP)
(RP)
(PONR)
(RD)
(AUX)
main volume
Mic volume
AUX
Mic
expression unit
reverb
brilliance
tremolo speed
(IPED)
(ILP)
(ID)
(IRHY)
(ITM)
(IC1)
(IC3)
(CH10)
(ITS)
(IC2)
(CH20)
(RV2)
power amp ch1 30W (IN1)
power amp ch2 25W (IN2)
(SP1)
(SP2)
6cm tweeter
30cm woofer
20cm woofer
+15V
E
-15V
+6V
+5V
E
power unit
SNS
power SW
power indicator

MOTHER CIRCUIT BOARD (MB)

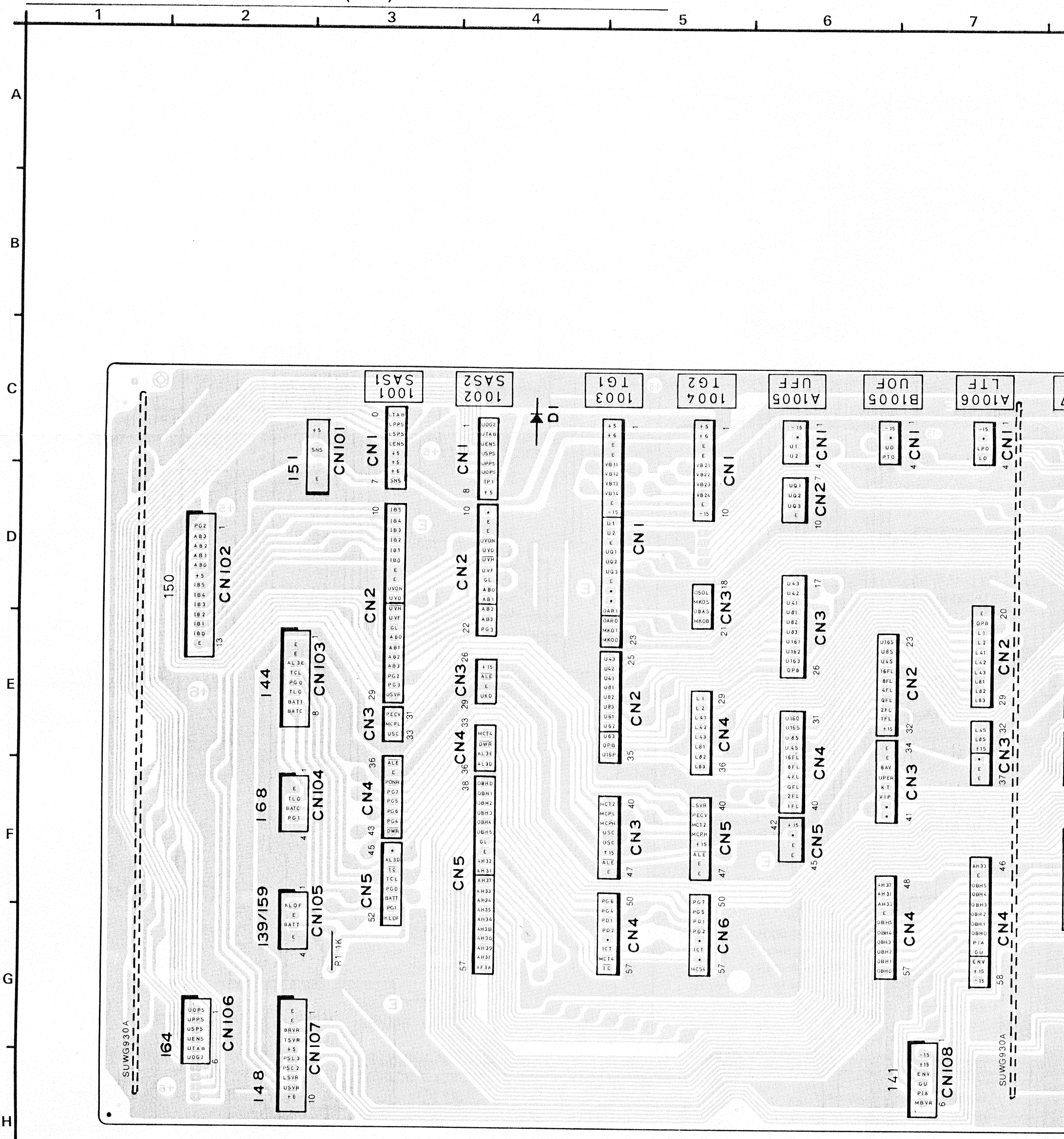

NOTE:
• DIODE
D1: SV

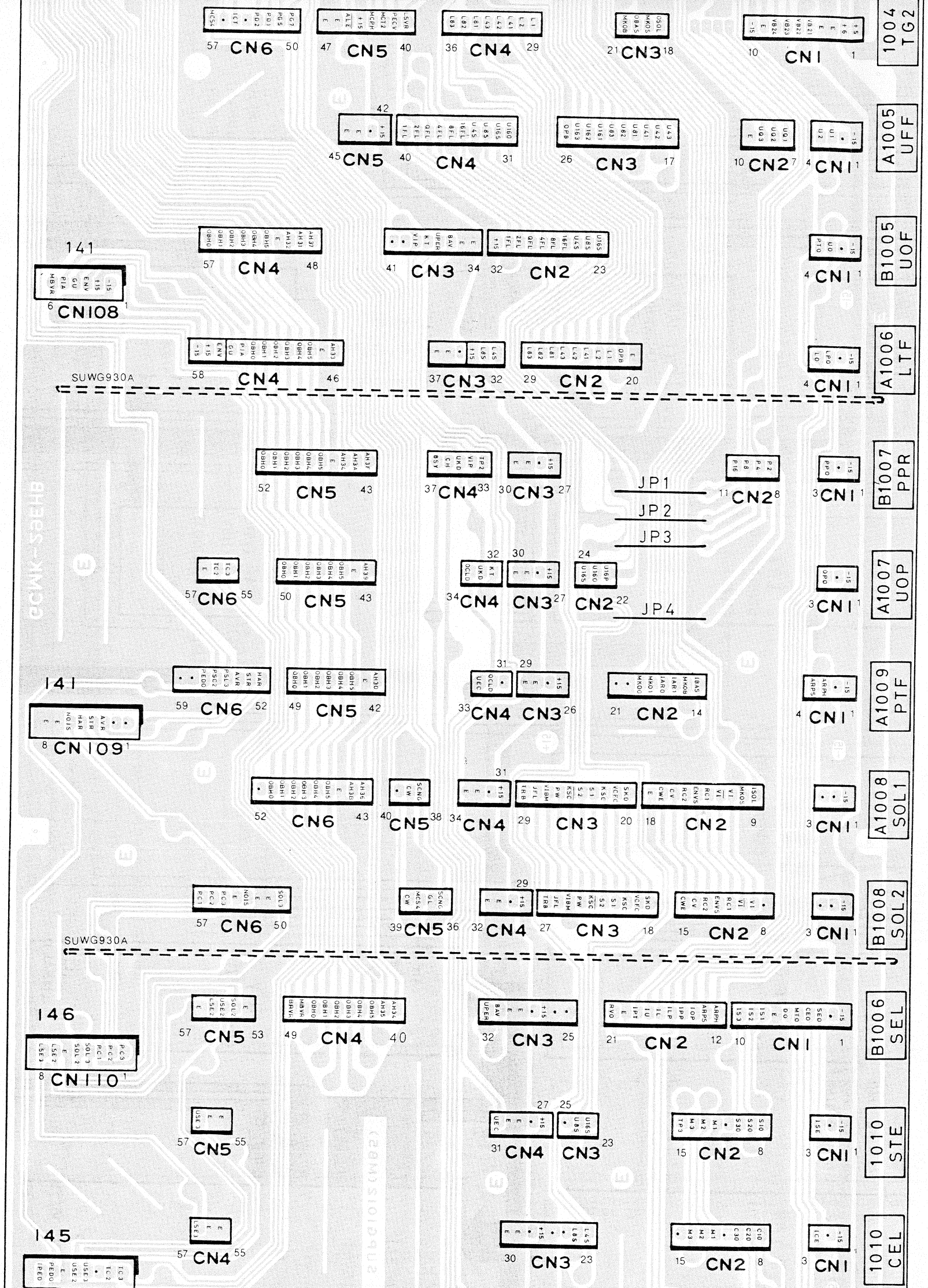

NOTE:
• DIODE
D1: SVDG10E1LF

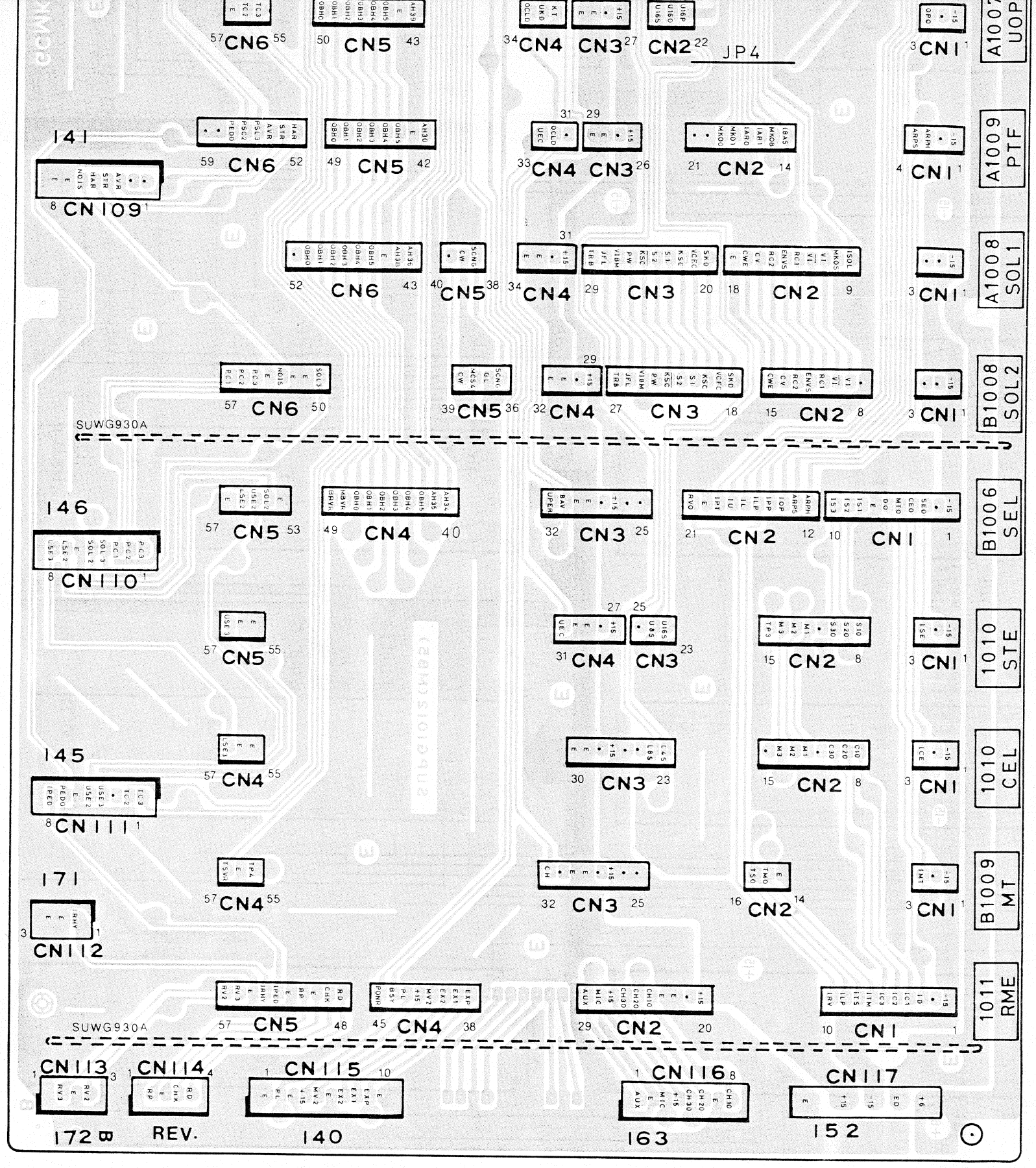
A1007 UOP
A1009 PTF
A1008 SOL1
B1008 SOL2
B1006 SEL
1010 STE
1010 CEL
B1009 MT
1011 RME
JP4
141
CN109
146
CN110
145
CN111
171
CN112
SUWG930A
SUWG930A
CN113
CN114
REV.
CN115
140
CN116
163
CN117
152
172B

SX-U50 WIRING DIAGRAM

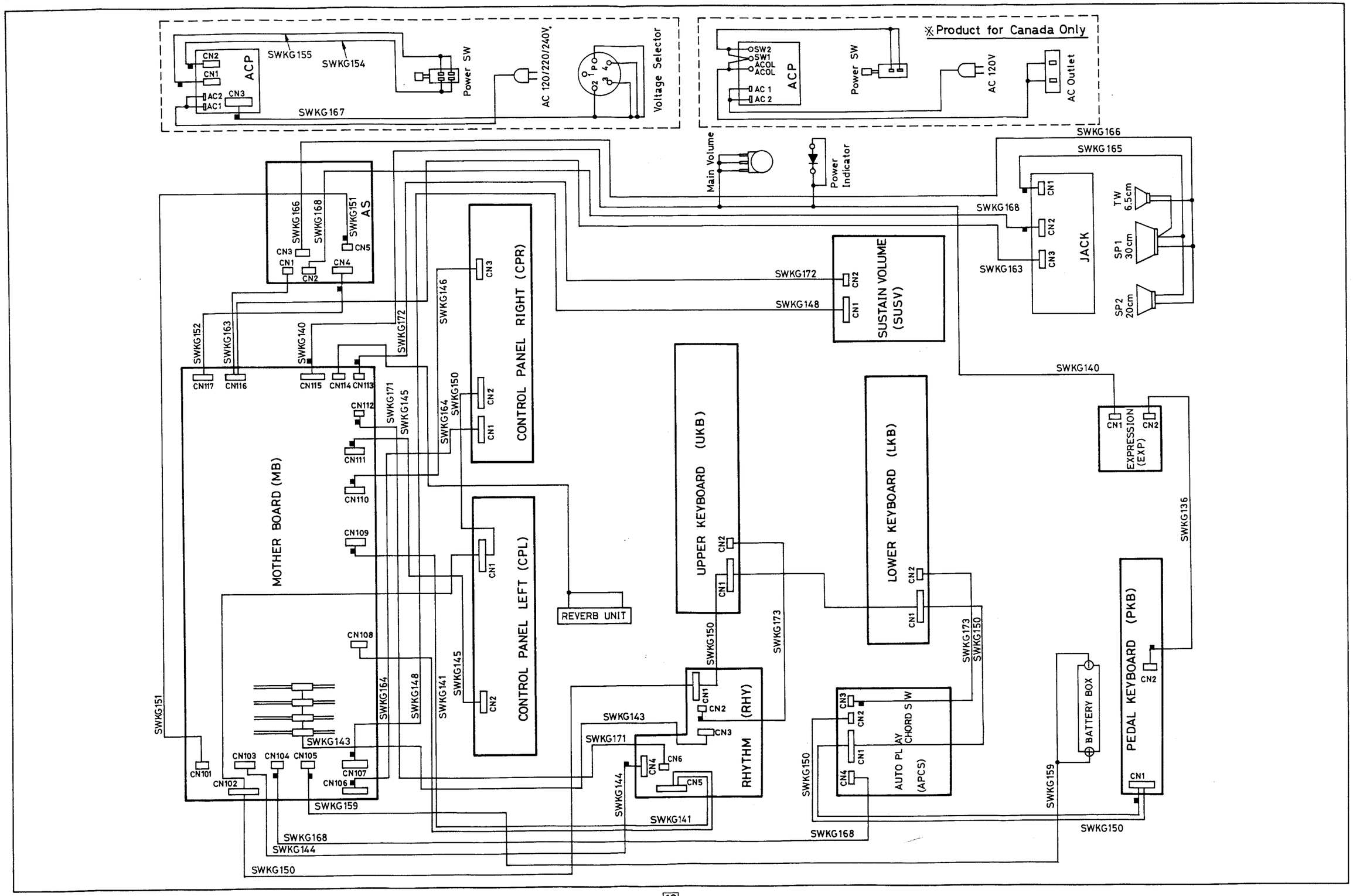

SYSTEM ASSIGNER 1 BLOCK DIAGRAM

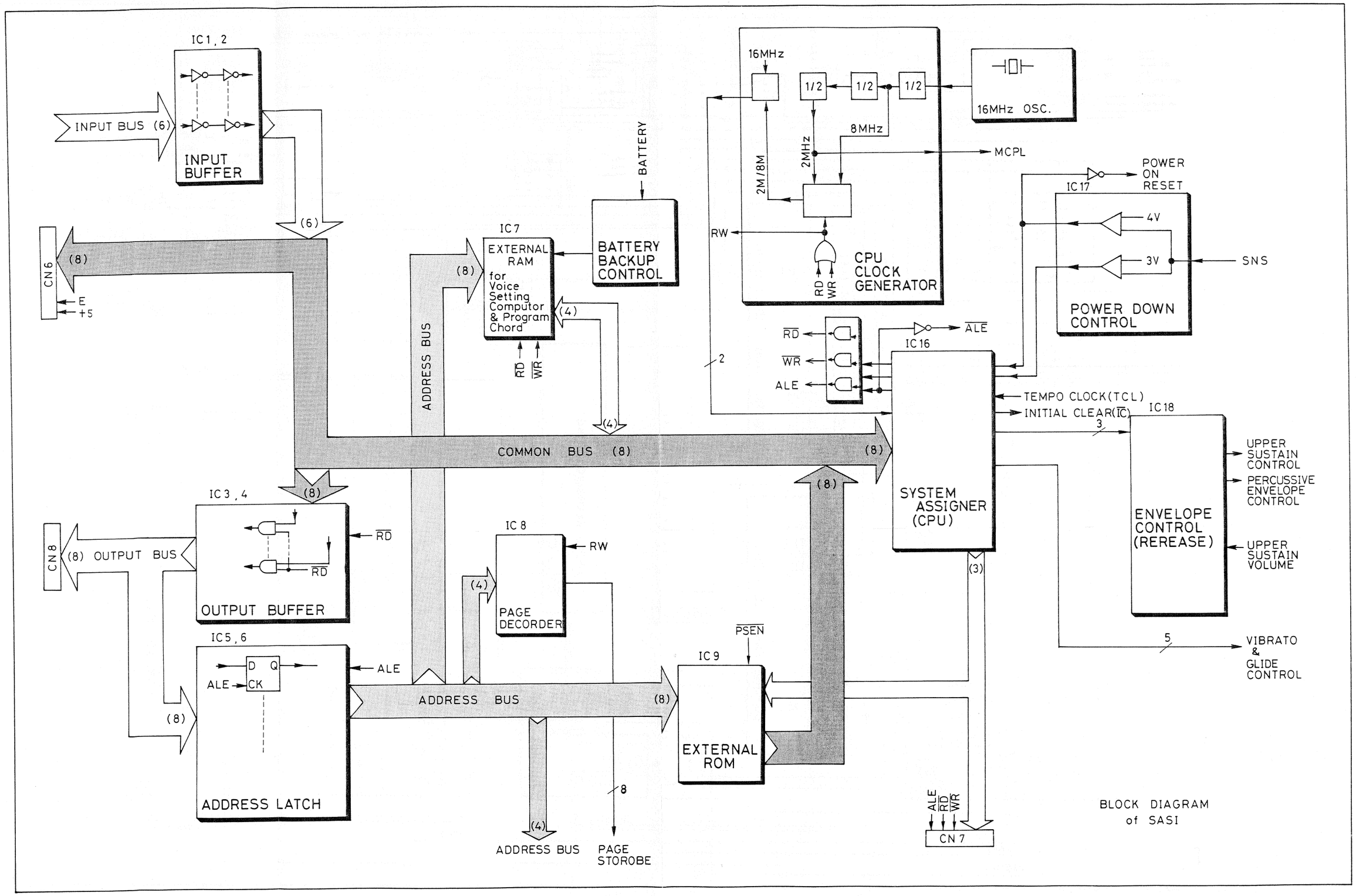

BLOCK DIAGRAM of SASI

SYSTEM BLOCK DIAGRAM OF THIS UNIT

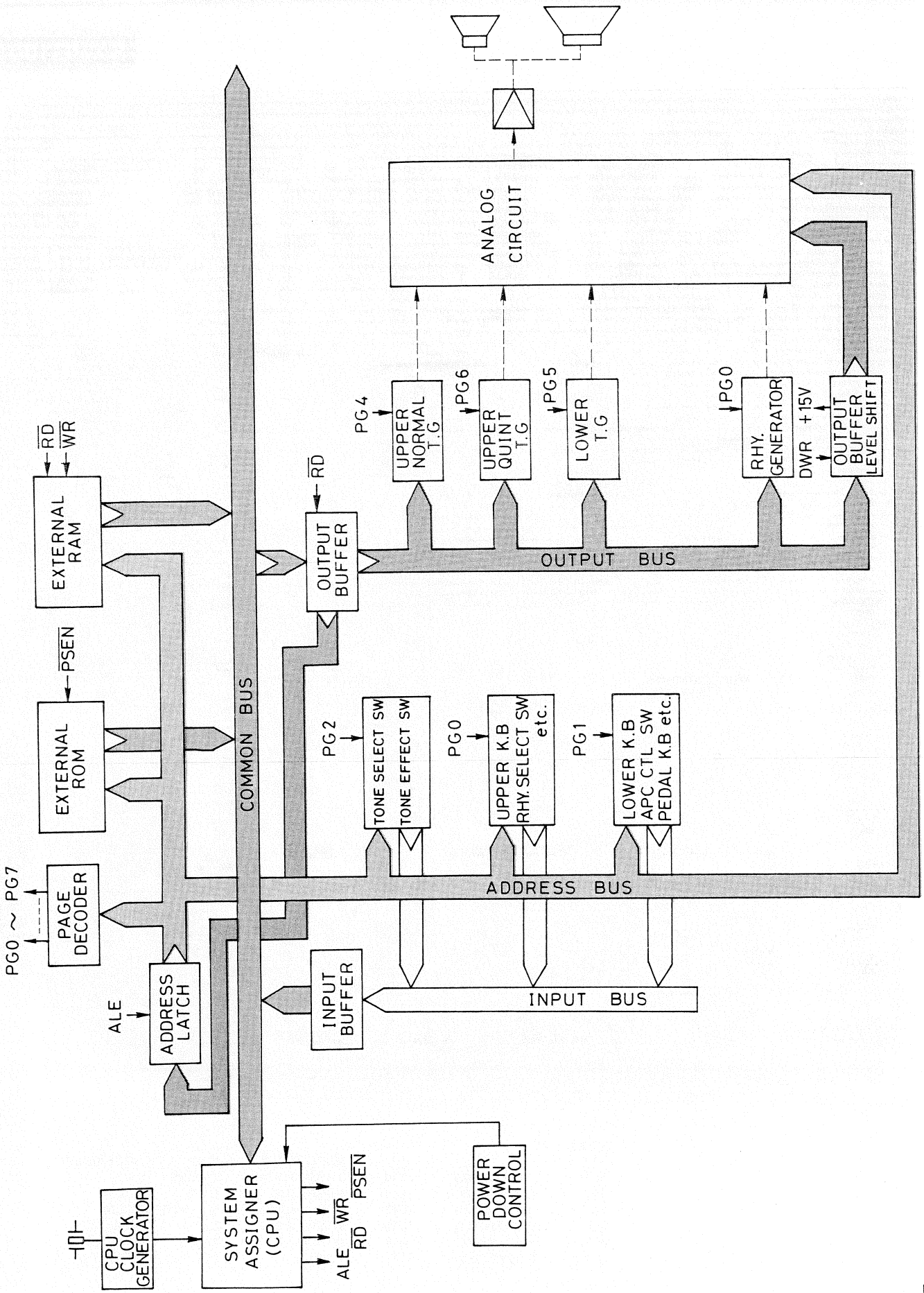

SYSTEM ASSIGNER 1 CIRCUIT DIAGRAM (SAS1)

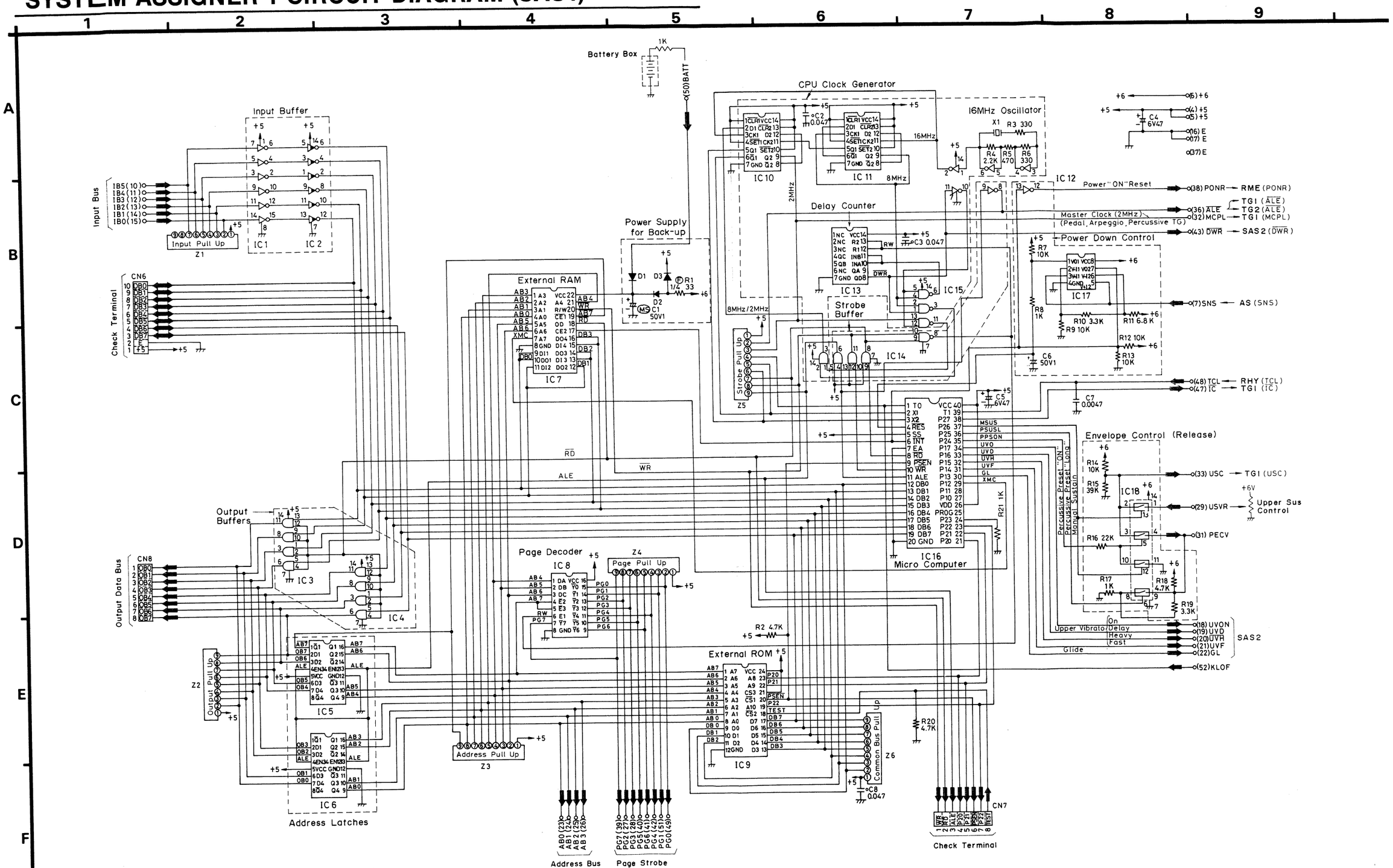

NOTES:

- IC'S

IC1:	SVIGTC4049BP	IC8:	SVIGM74LS138	IC16:	SVIGD8049037
IC2:	SVIGM74LS05	IC9:	SVIGD2316675	IC17:	AN6914
IC3, 4, 14:	SVIGM74LS08	IC10, 11:	SVIGM74LS74	IC18:	SVIGTC4066BP
IC5, 6:	SVIGM74LS75	IC12:	SVIGM74LS04		
IC7:	SVIGD5101LC	IC13:	SVIGM74LS293		
		IC15:	SVIGM74LS00		

- DIODES
  D1~3: MA150IR

- BLOCK RESISTORS

Z3, 6:	EXBP88472M
Z2, 4, 5:	EXBP88102M
Z1:	EXBP88152M

Block Resistor

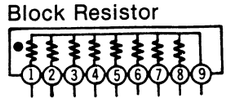

SYSTEM ASSIGNER 2 CIRCUIT DIAGRAM (SAS2)

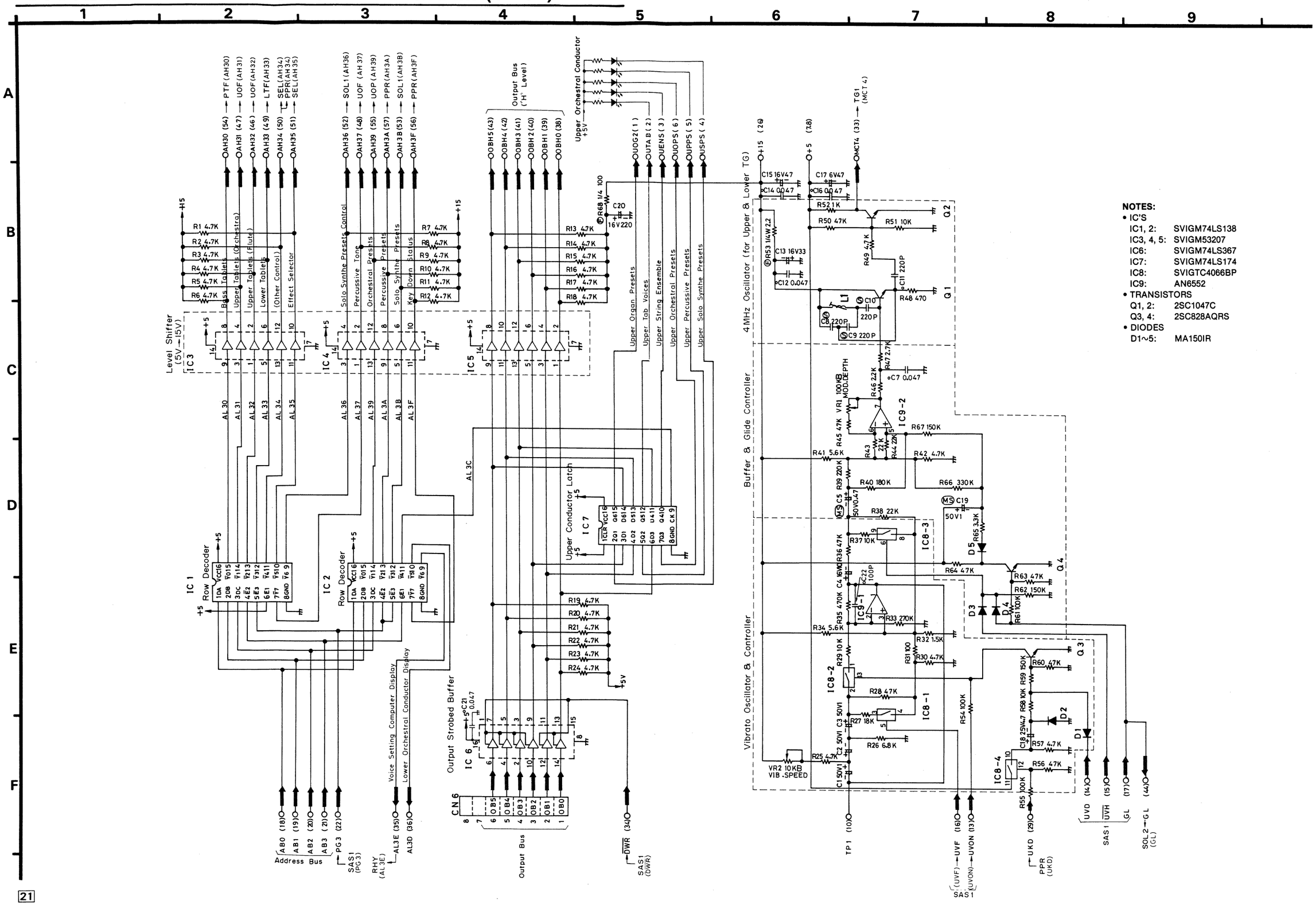

NOTES:

- IC'S
  - IC1, 2: SVIGM74LS138
  - IC3, 4, 5: SVIGM53207
  - IC6: SVIGM74LS367
  - IC7: SVIGM74LS174
  - IC8: SVIGTC4066BP
  - IC9: AN6552
- TRANSISTORS
  - Q1, 2: 2SC1047C
  - Q3, 4: 2SC828AQRS
- DIODES
  - D1~5: MA150IR

SYSTEM ASSIGNER 2 CIRCUIT BOARD (SAS2)

SXPG10021

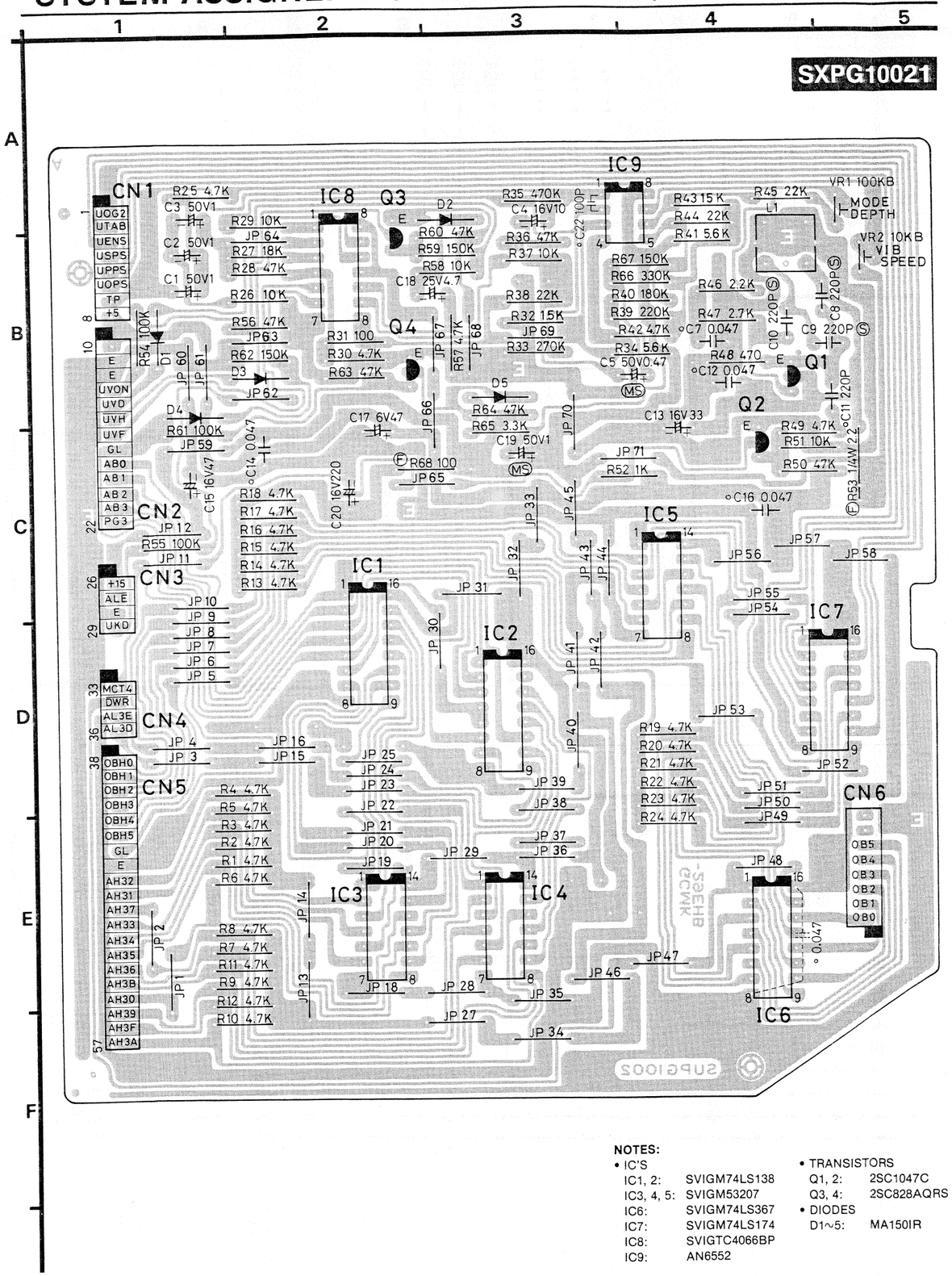

NOTES:

- IC'S
  - IC1, 2: SVIGM74LS138
  - IC3, 4, 5: SVIGM53207
  - IC6: SVIGM74LS367
  - IC7: SVIGM74LS174
  - IC8: SVIGTC4066BP
  - IC9: AN6552
- TRANSISTORS
  - Q1, 2: 2SC1047C
  - Q3, 4: 2SC828AQRS
- DIODES
  - D1~5: MA150IR

TONE GENERATOR 1 CIRCUIT BOARD (TG1)

SXPG10031

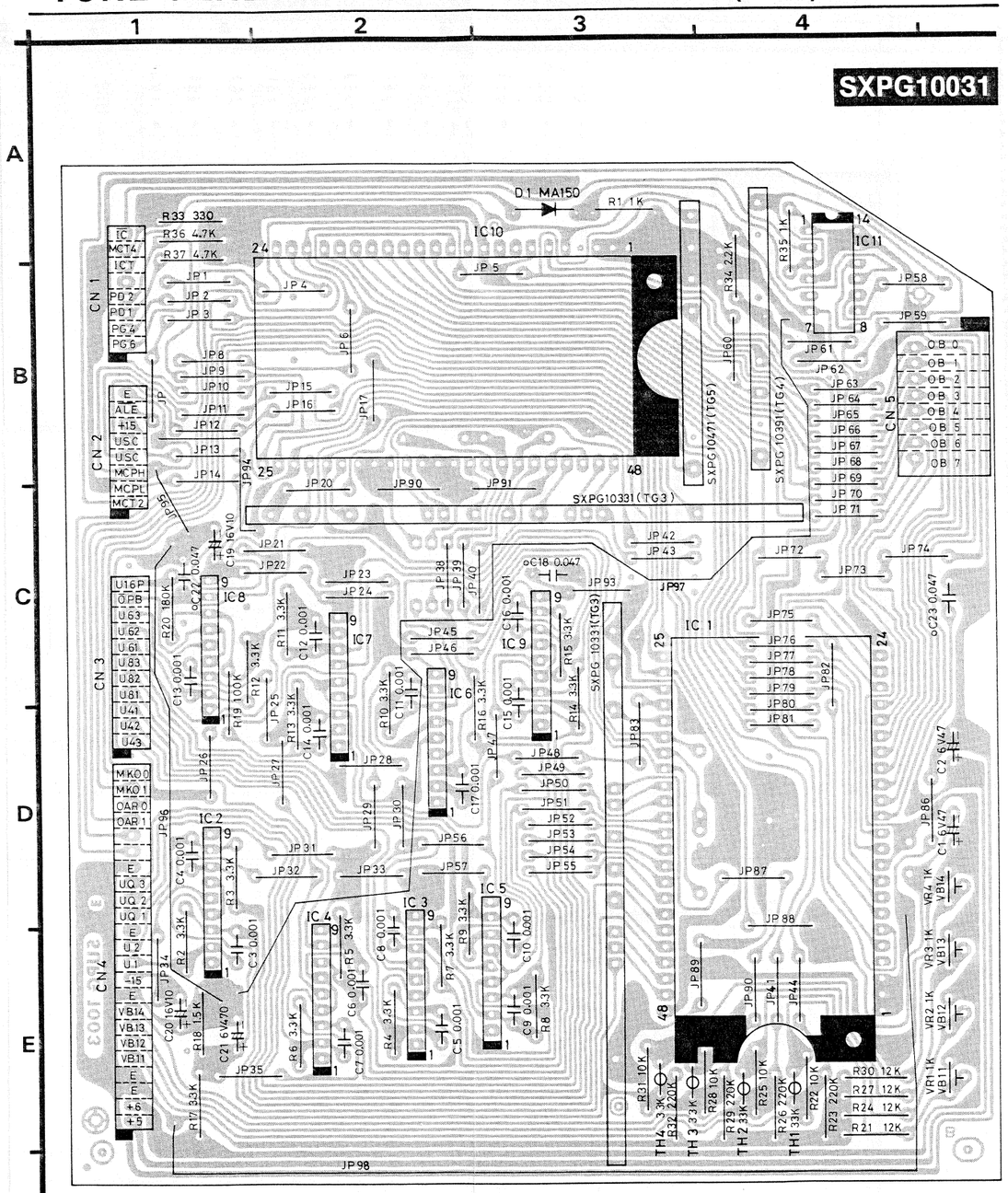

NOTES:

- TG1
  - IC'
    - IC1, 10: SVIGMC5227
    - IC11: SVIGM74LS74
    - IC2~9: AN6551F
- TG3
  - DIODES
    - D1~8: SVDG1SS53
  - BLOCK RESISTORS
    - Z1, 2: EXBP84475K
    - Z3: EXBP88684K
- TG4
  - TRANSISTORS
    - Q1, 2: 2SC2377C
  - DIODE
    - D1: MA150IR
- TG5
  - TRANSISTORS
    - Q1~3: 2SC2377C
  - DIODES
    - D1, 2: MA150IR

TONE GENERATOR 1 BLOCK DIAGRAM

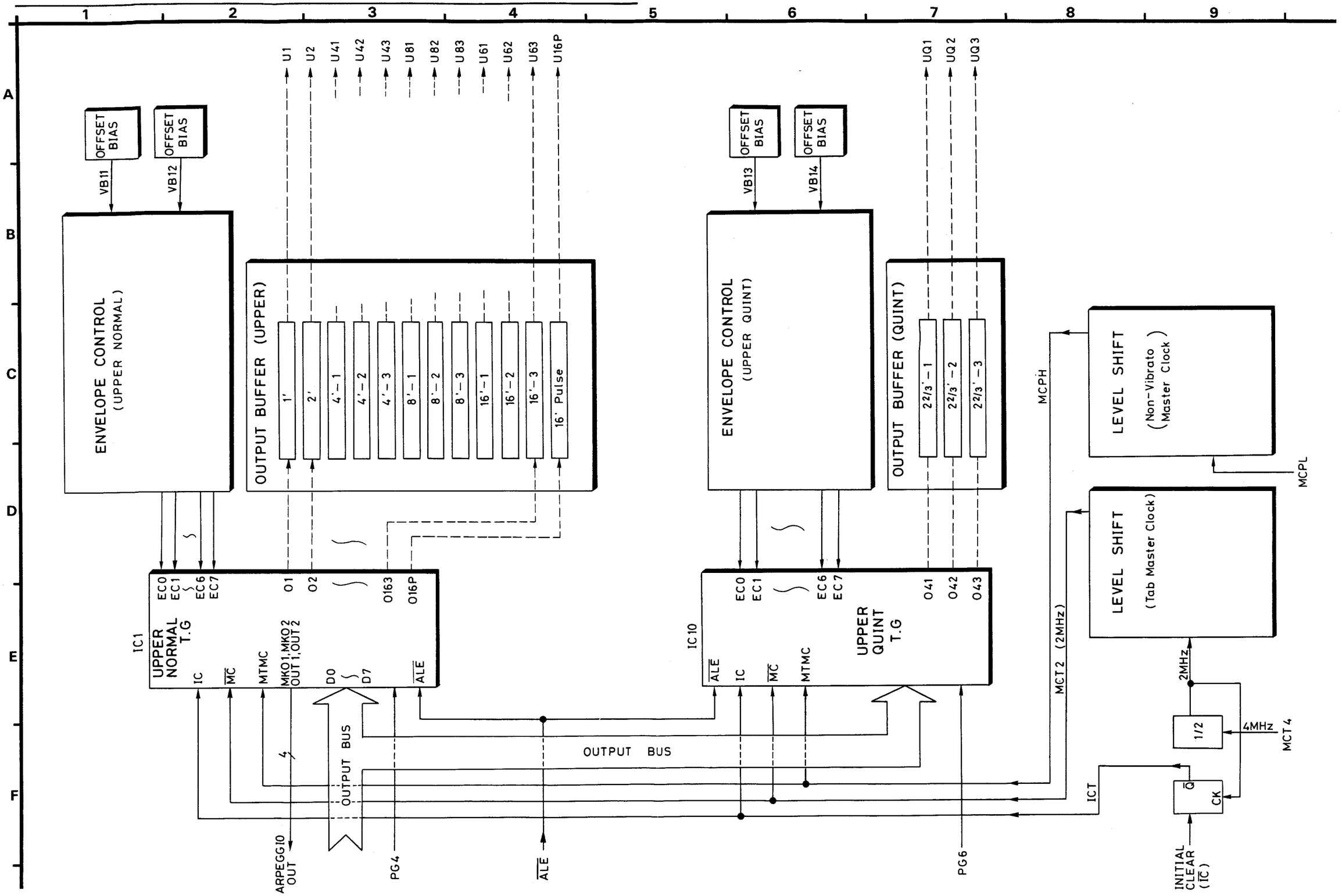

TONE GENERATOR 1 CIRCUIT DIAGRAM (TG1)

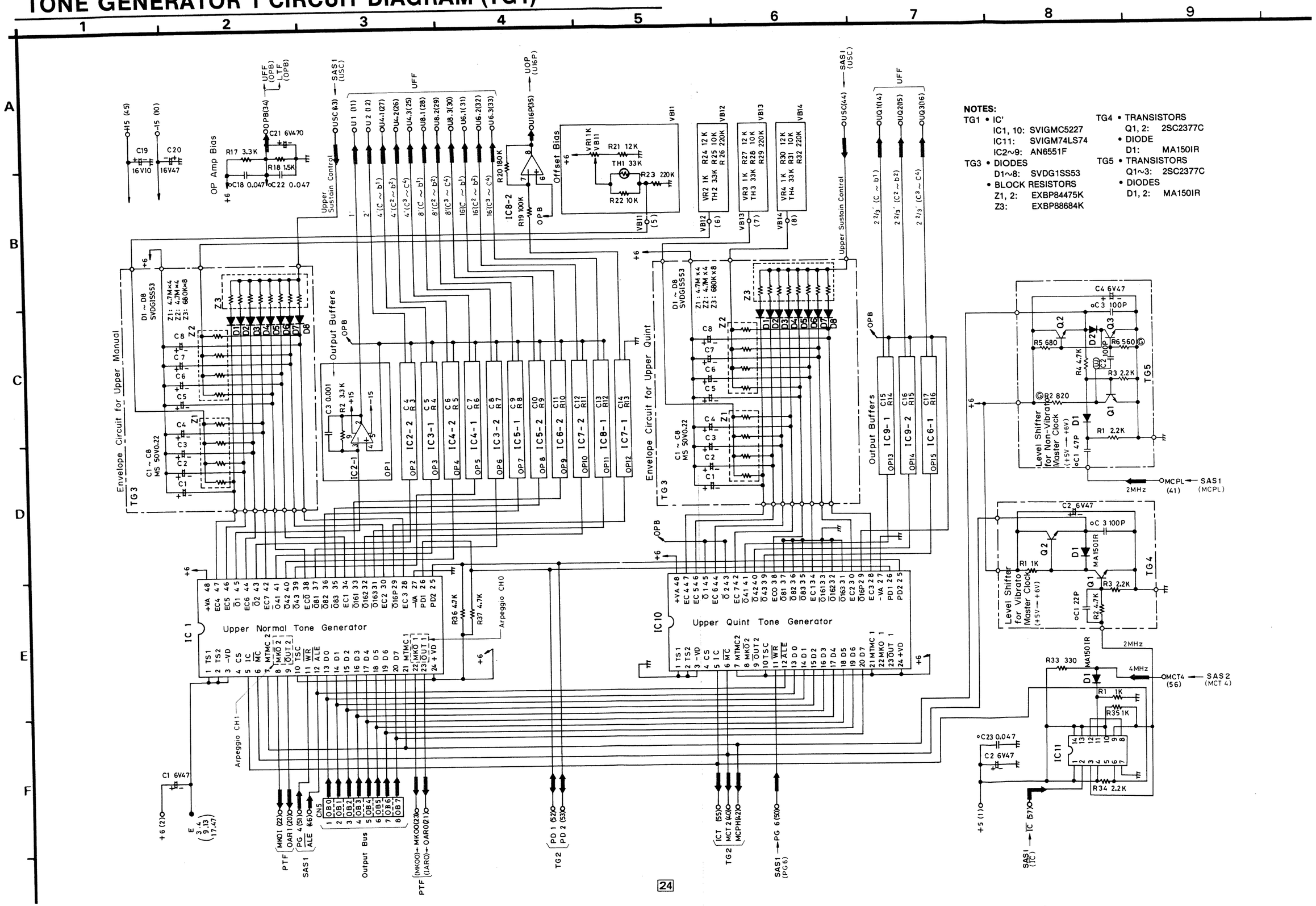

TONE GENERATOR 2 CIRCUIT DIAGRAM (TG2)

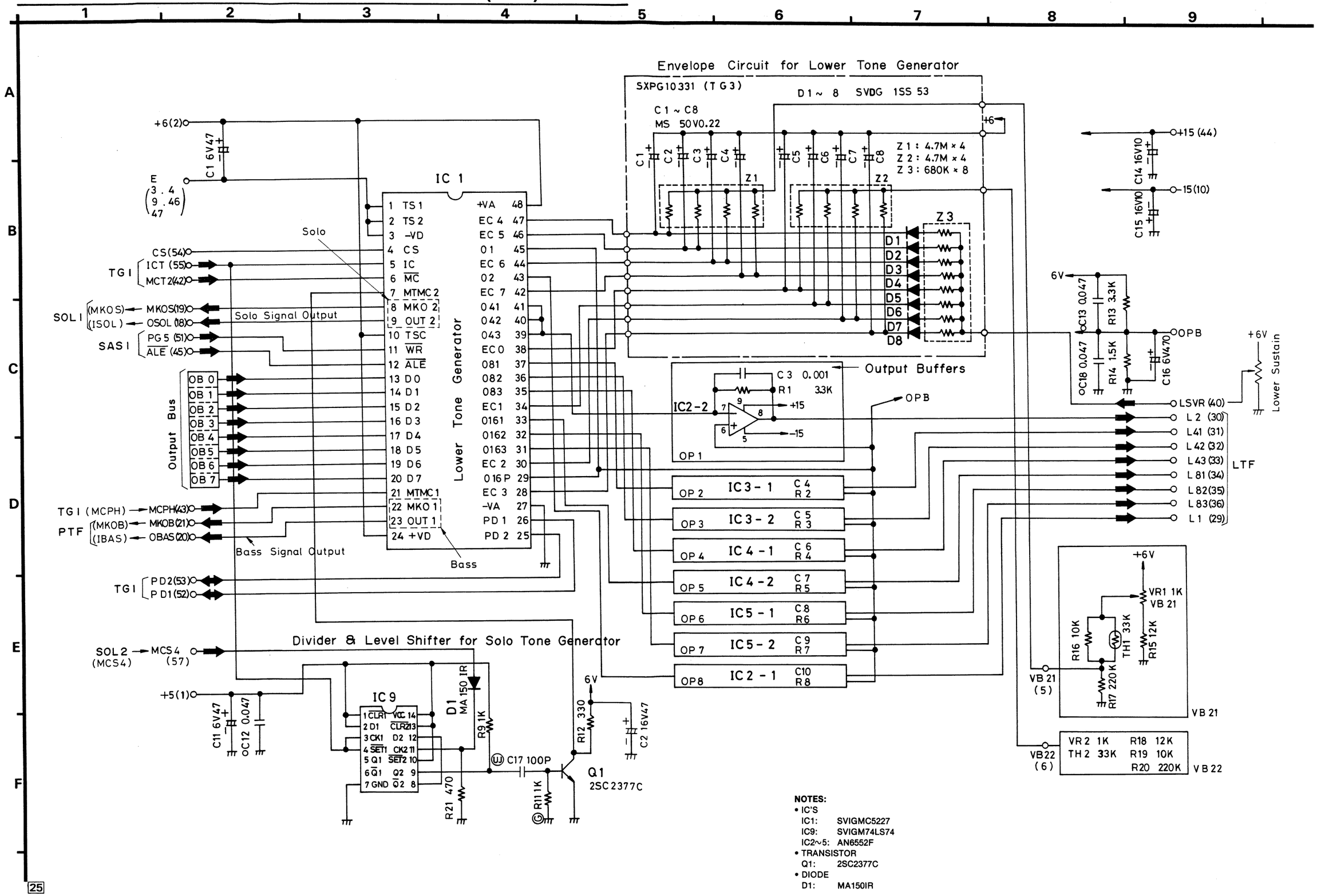

NOTES:

- IC'S
  - IC1: SVIGMC5227
  - IC9: SVIGM74LS74
  - IC2~5: AN6552F
- TRANSISTOR
  - Q1: 2SC2377C
- DIODE
  - D1: MA150IR

TONE GENERATOR 2 CIRCUIT BOARD (TG2)

SXPG10042

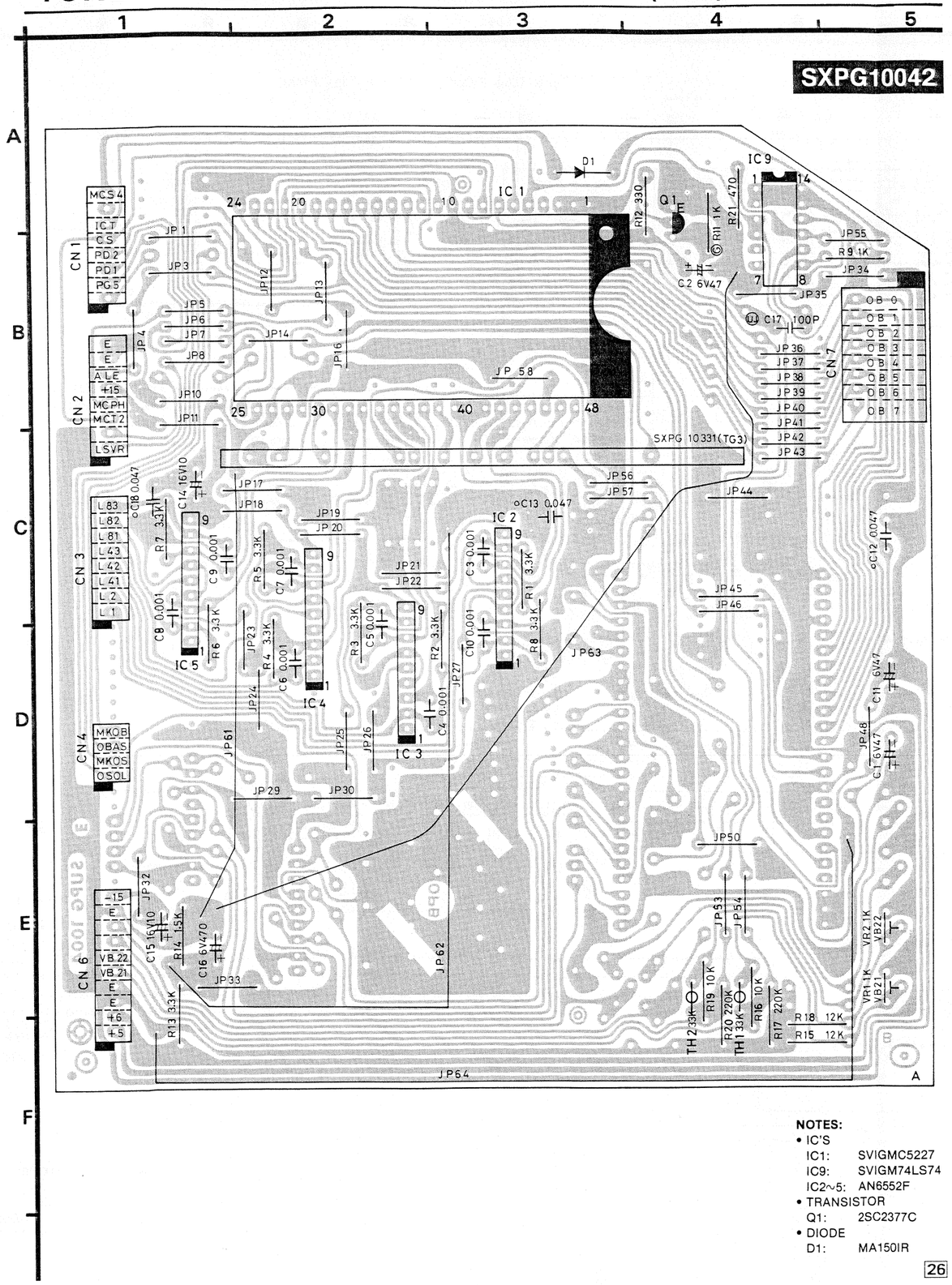

NOTES:
- IC'S
  - IC1: SVIGMC5227
  - IC9: SVIGM74LS74
  - IC2~5: AN6552F
- TRANSISTOR
  - Q1: 2SC2377C
- DIODE
  - D1: MA150IR

TONE GENERATOR (TG3, TG4, TG5) CIRCUIT BOARD

TG3

SXPG10331

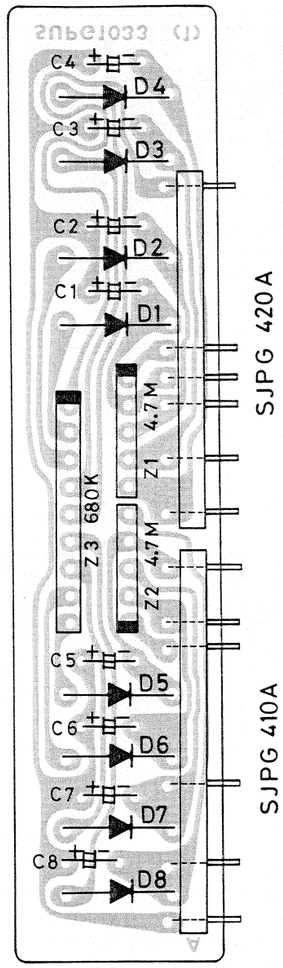

NOTES:
- CAPACITORS
  - C1~8: (MS) 50V0.22
- DIODES
  - D1~8: SVDG1SS53
- BLOCK RESISTORS
  - Z1, 2: EXBP84475K
  - Z3: EXBP88684K

TG4

SXPG10391

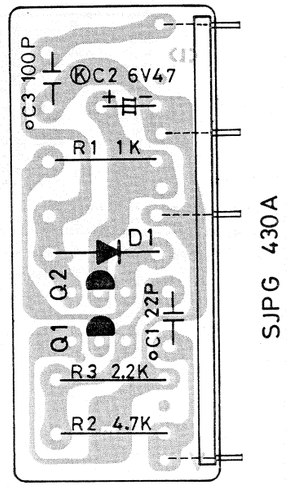

NOTES:
- TRANSISTORS
  - Q1, 2: 2SC2377C
- DIODES
  - D1: MA150IR

TG5

SXPG10471

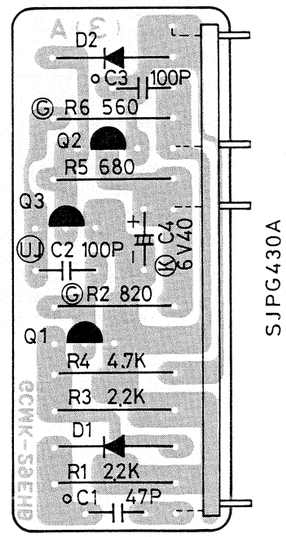

NOTES:
- TRANSISTORS
  - Q1~3: 2SC2377C
- DIODES
  - D1, 2: MA150IR

UPPER FLUTE FILTER CIRCUIT DIAGRAM (UFF)

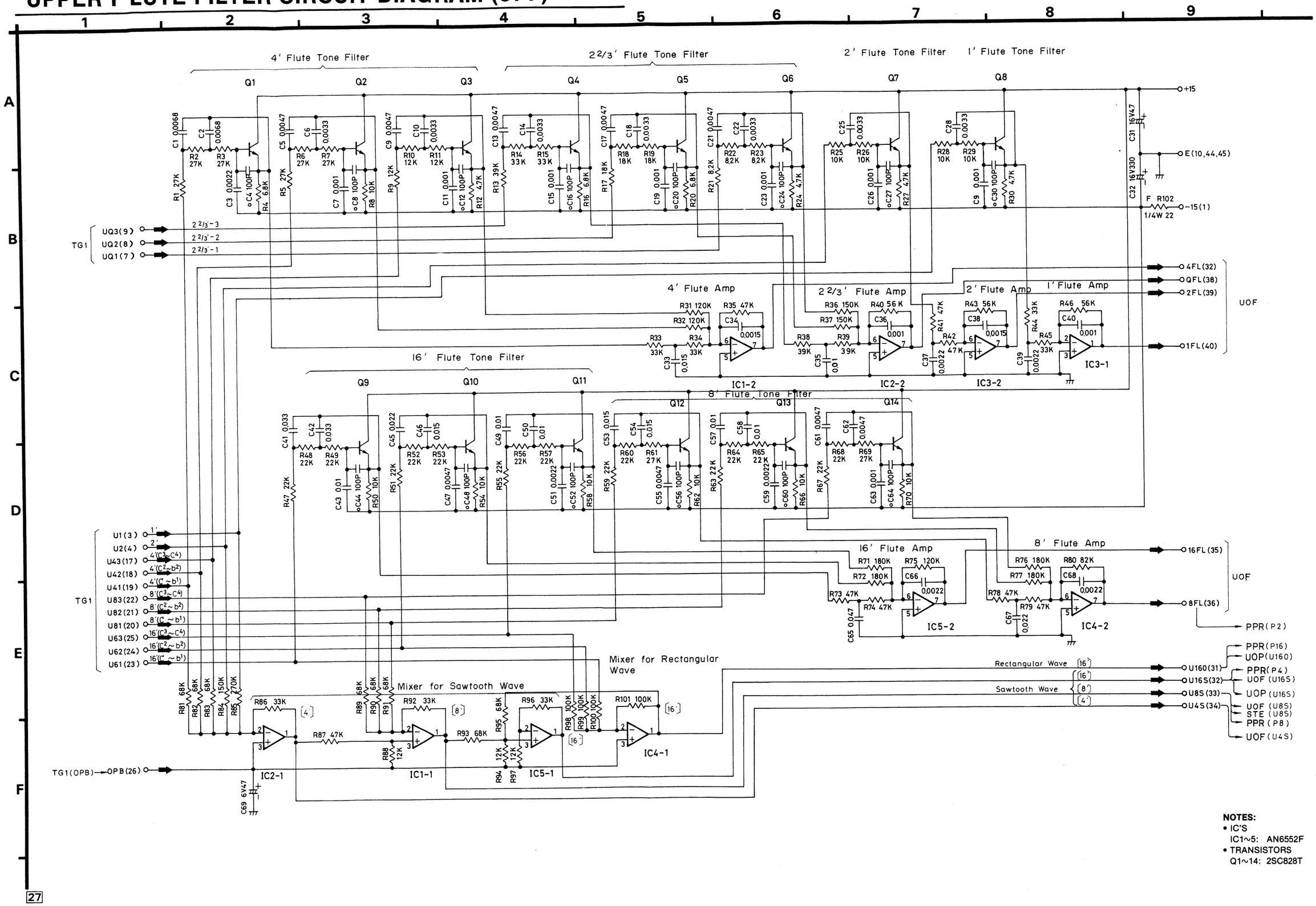

NOTES:
- IC'S
  IC1~5: AN6552F
- TRANSISTORS
  Q1~14: 2SC828T

UPPER FLUTE FILTER CIRCUIT BOARD (UFF)

SXPGA10051

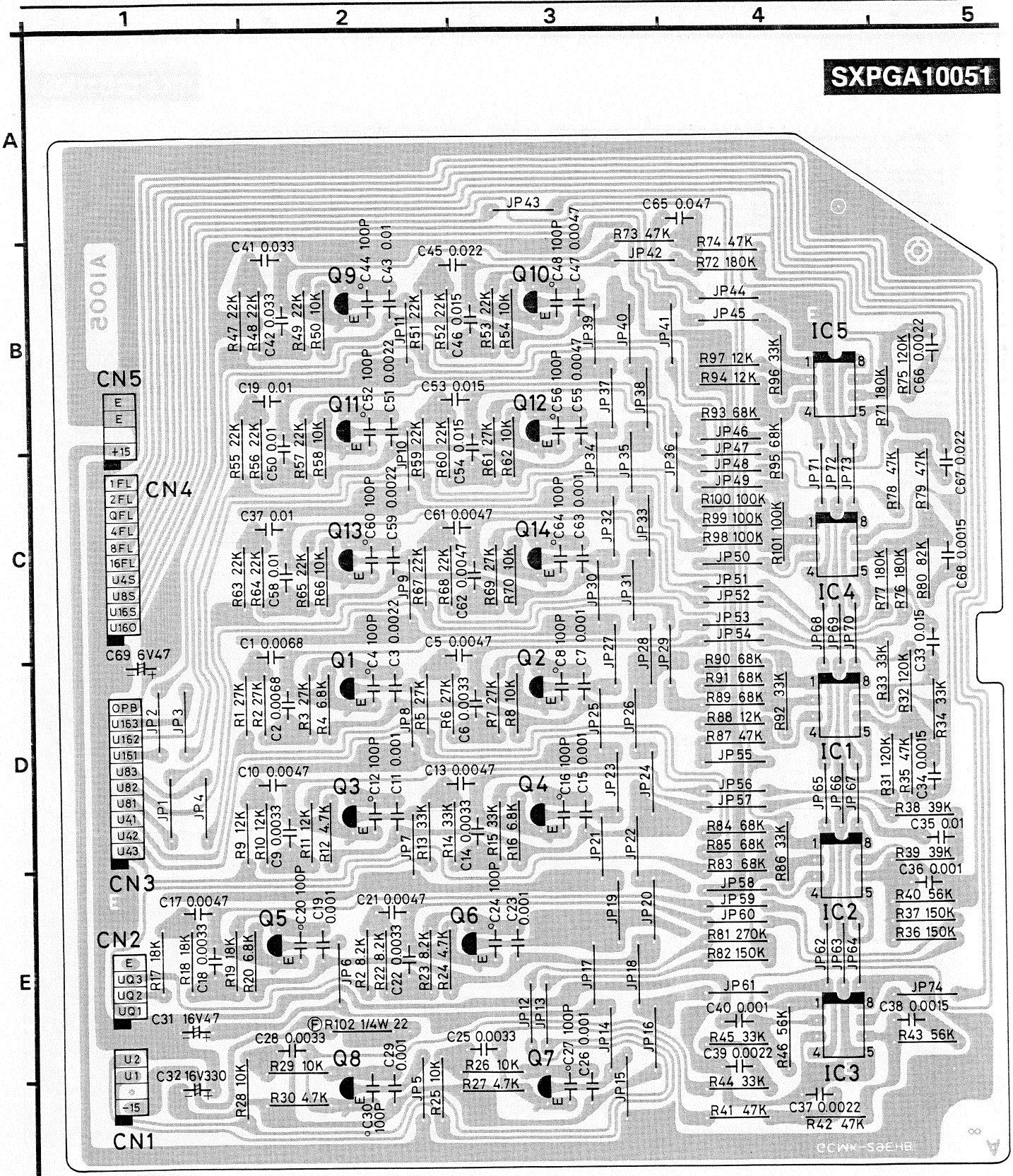

NOTES:

- IC'S
  IC1~5: AN6552F
- TRANSISTORS
  Q1~14: 2SC828T

UPPER ORCHESTRAL FILTER CIRCUIT BOARD (UOF)

SXPGB10051

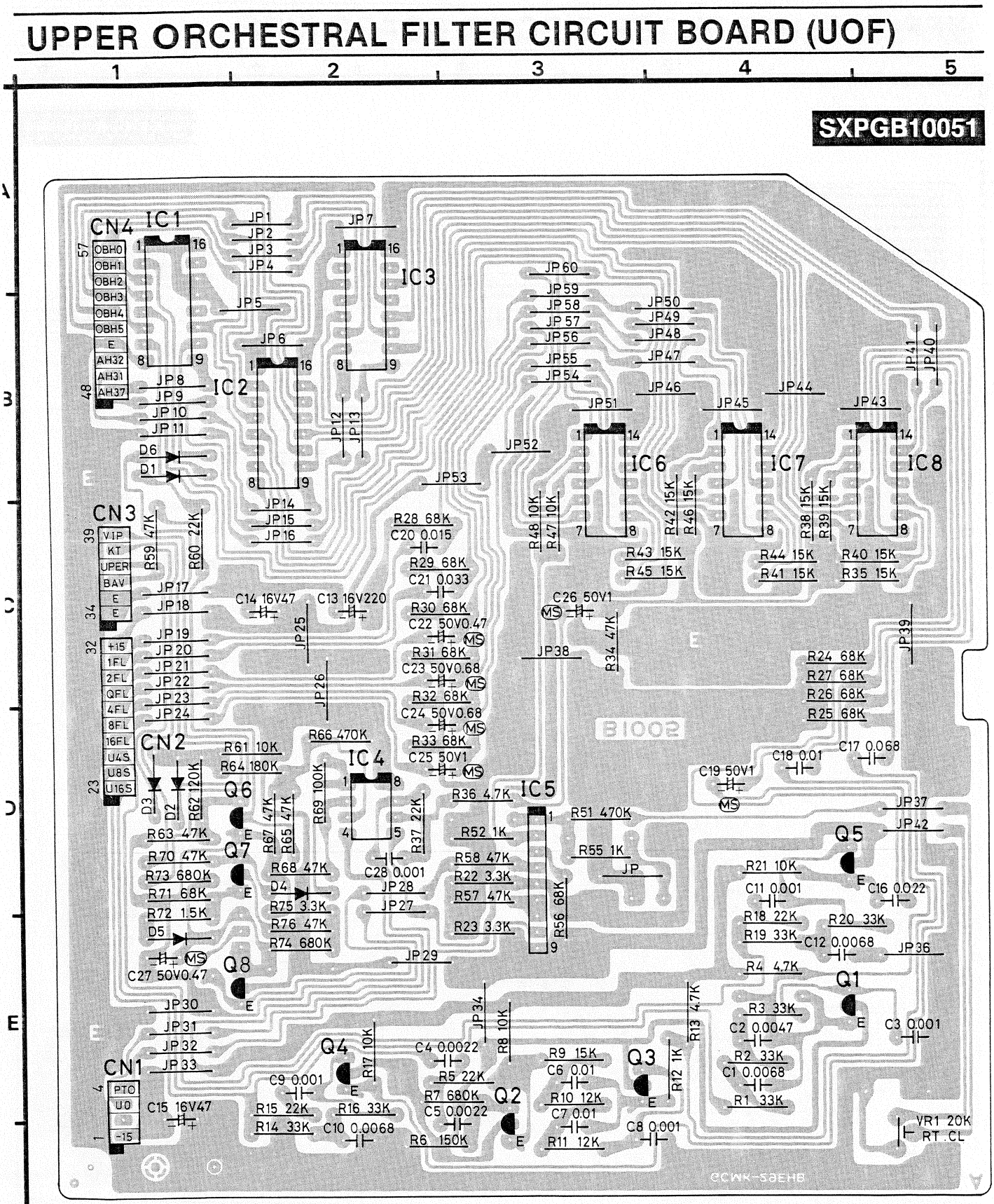

NOTES:

- IC'S
  - IC1~3: SVIGTC40174B
  - IC4: AN6552F
  - IC5: SVIGBA6110
  - IC6~8: SVIGTC4066BP
- TRANSISTORS
  - Q1~5: 2SC1328T
  - Q6~8: 2SC828AQRS
- DIODES
  - D1~6: MA150IR

UPPER ORCHESTRIAL FILTER CIRCUIT DIAGRAM (UOF)

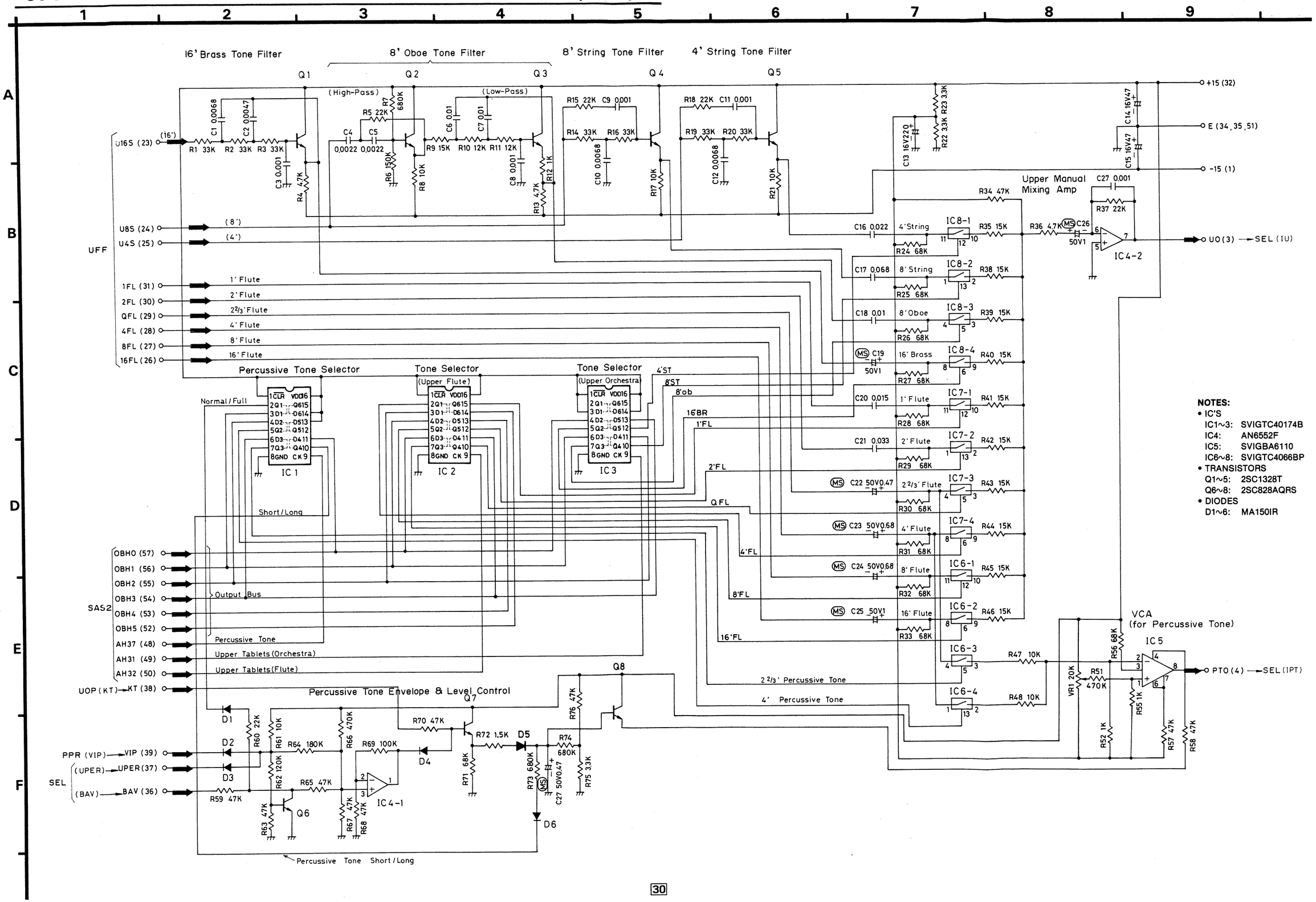

NOTES:

- IC'S
  - IC1~3: SVIGTC40174B
  - IC4: AN6552F
  - IC5: SVIGBA6110
  - IC6~8: SVIGTC4066BP
- TRANSISTORS
  - Q1~5: 2SC1328T
  - Q6~8: 2SC828AQRS
- DIODES
  - D1~6: MA150IR

LOWER TONE FILTER CIRCUIT DIAGRAM (LTF)

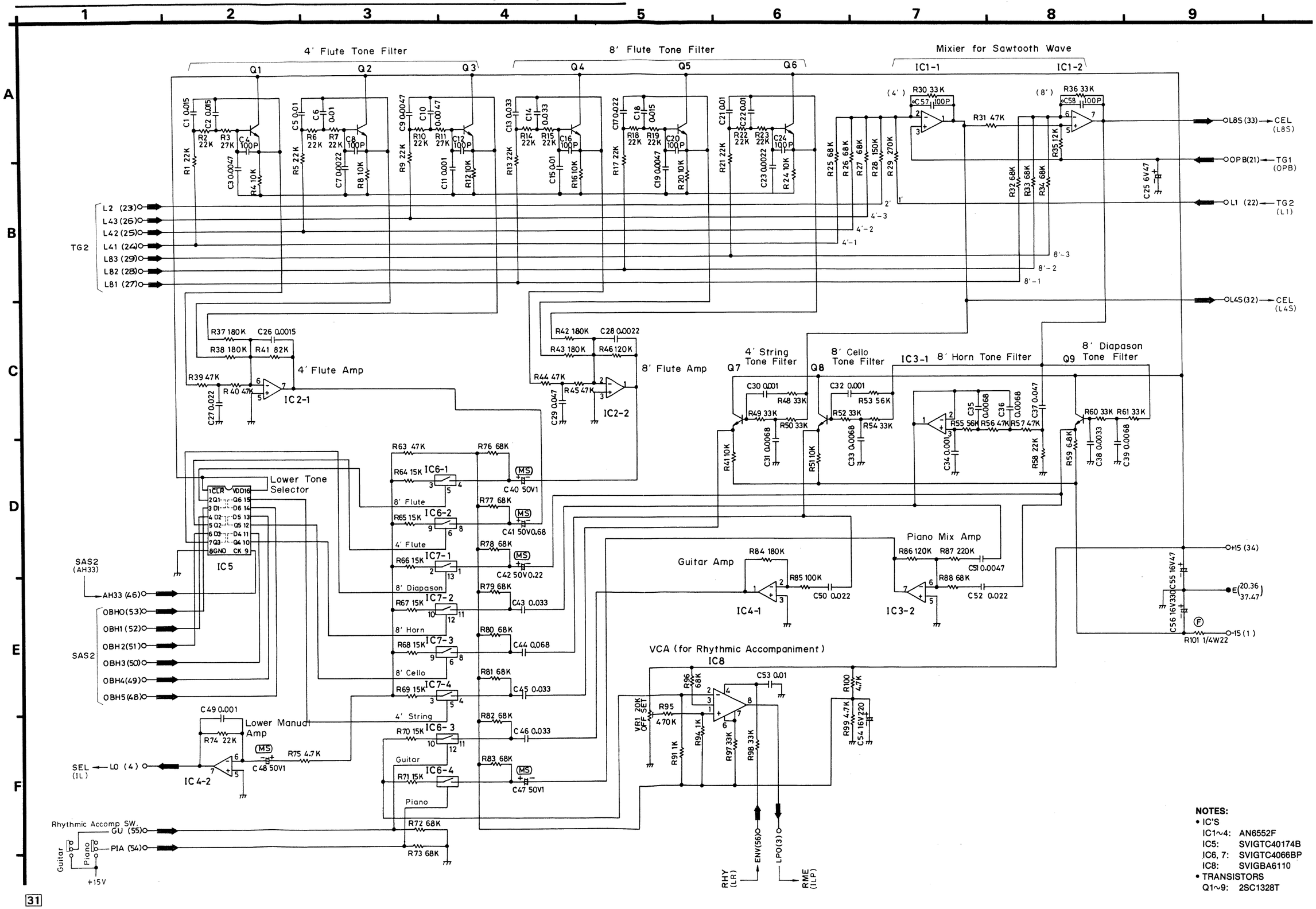

NOTES:

- IC'S
  - IC1~4: AN6552F
  - IC5: SVIGTC40174B
  - IC6, 7: SVIGTC4066BP
  - IC8: SVIGBA6110
- TRANSISTORS
  - Q1~9: 2SC1328T

LOWER TONE FILTER CIRCUIT BOARD (LTF)

SXPGA10061

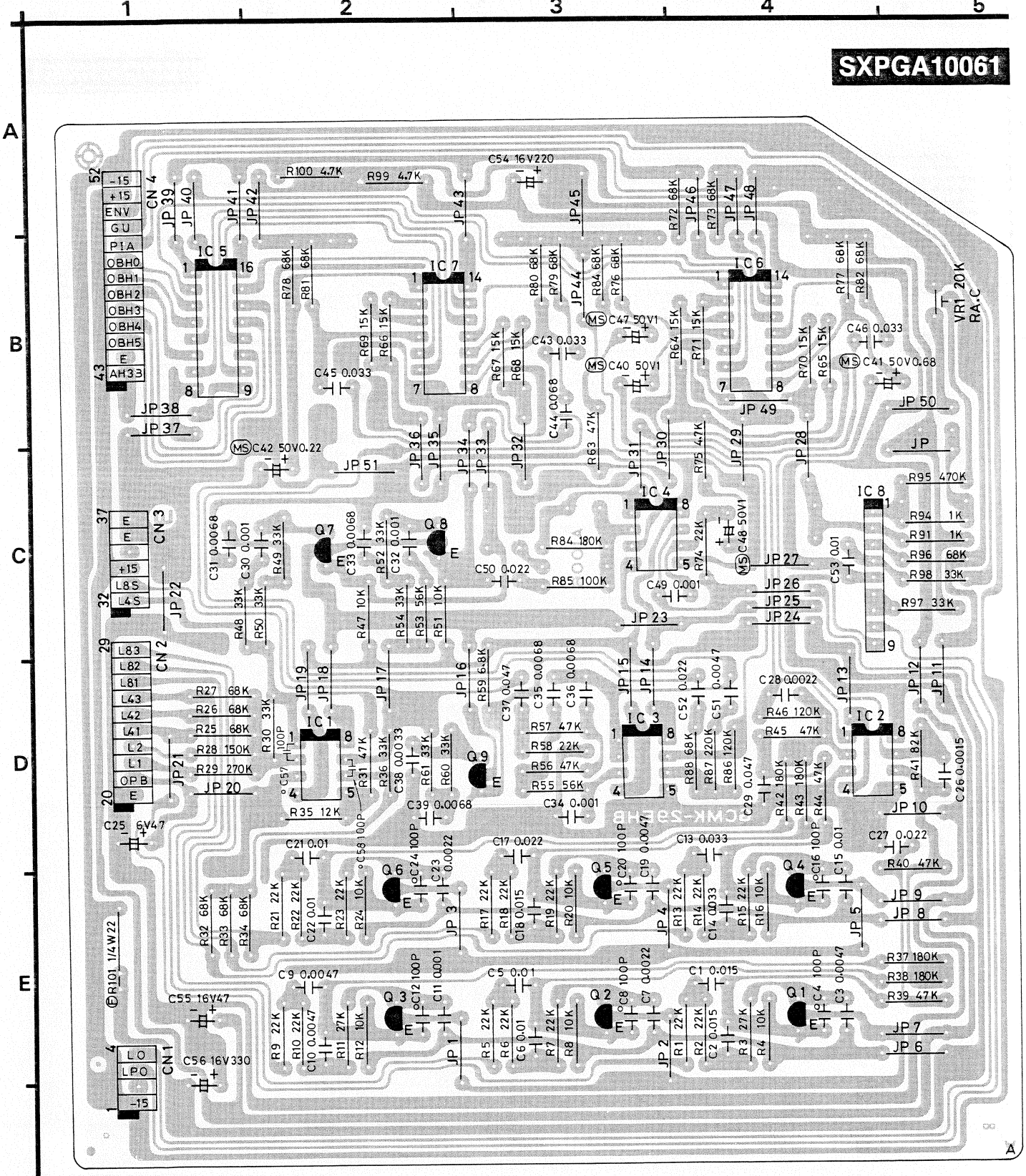

NOTES:

- IC'S
  - IC1~4: AN6552F
  - IC5: SVIGTC40174B
  - IC6, 7: SVIGTC4066BP
  - IC8: SVIGBA6110
- TRANSISTORS
  - Q1~9: 2SC1328T

SELECTOR CIRCUIT BOARD (SEL)

SXPGB10061

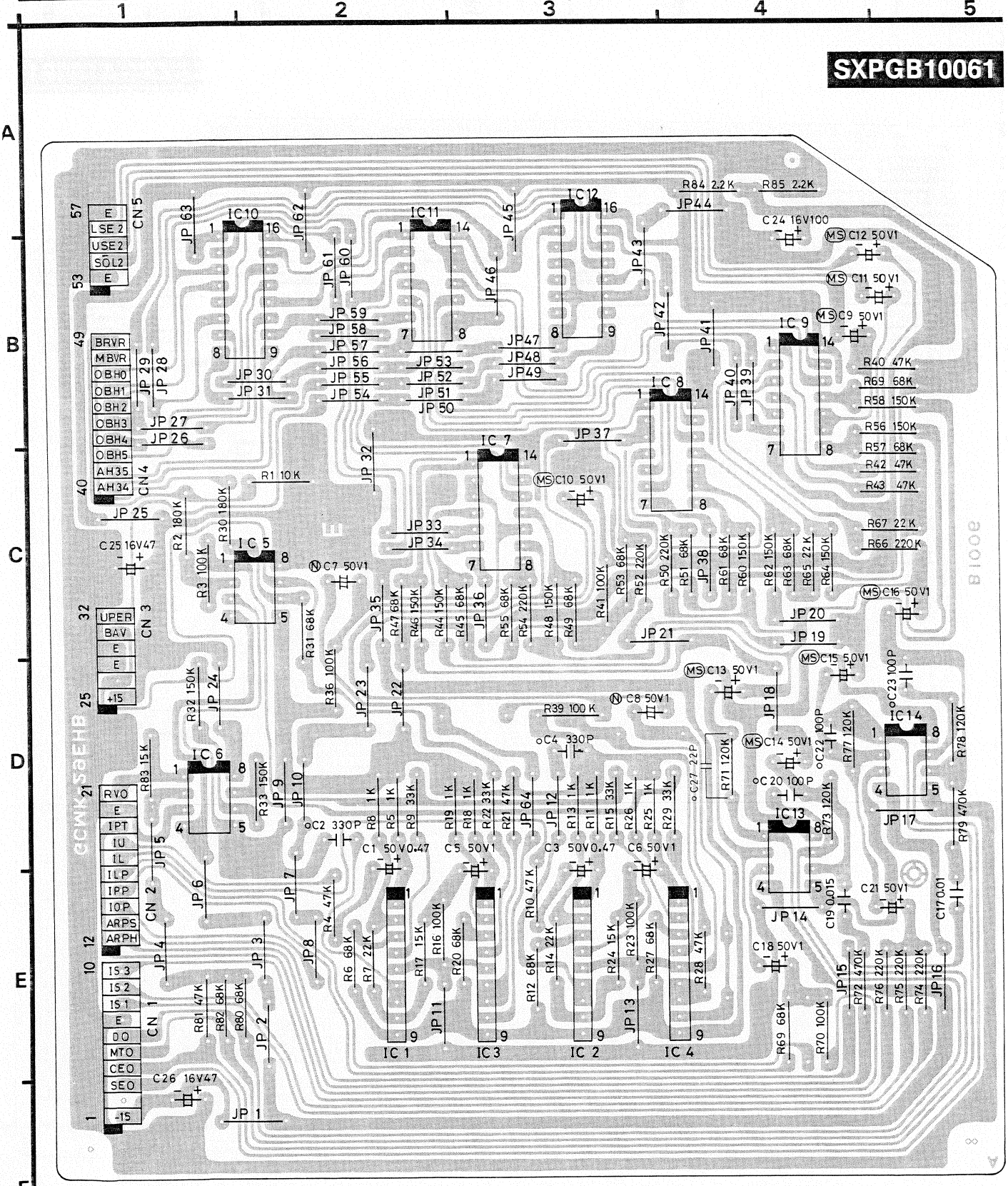

NOTES:

- IC'S

IC1~4:	SVIGBA6110
IC5, 6, 13, 14:	AN6552F
IC7~9:	SVIGTC4066BP
IC10, 12:	SVIGTC40174B
IC11:	SVIGTC4001BP

SELECTOR CIRCUIT DIAGRAM (SEL)

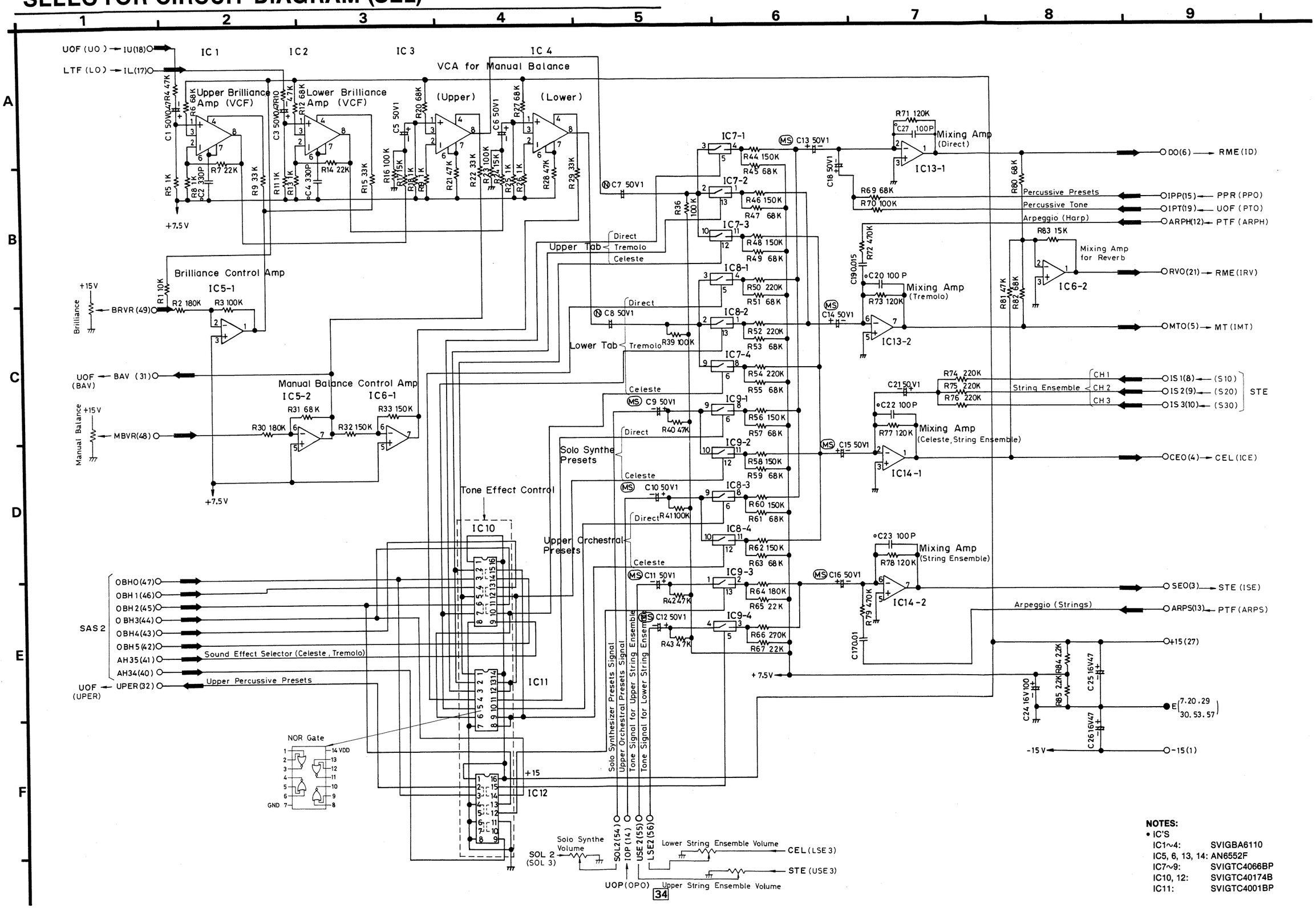

NOTES:

- IC'S

IC1~4:	SVIGBA6110
IC5, 6, 13, 14:	AN6552F
IC7~9:	SVIGTC4066BP
IC10, 12:	SVIGTC40174B
IC11:	SVIGTC4001BP

UPPER ORCHESTRAL PRESETS CIRCUIT DIAGRAM (UOP)

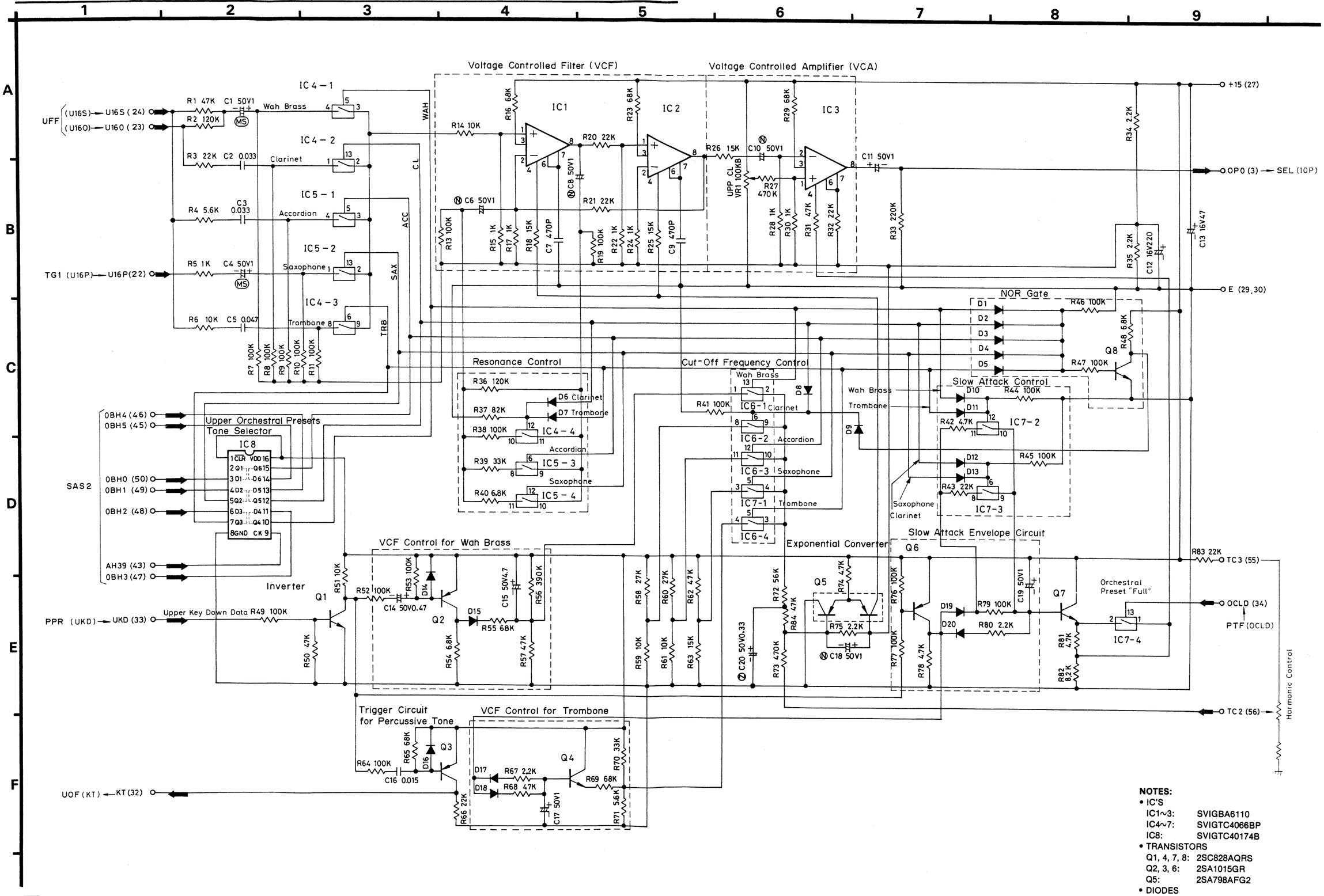

NOTES:

- IC'S
  - IC1~3: SVIGBA6110
  - IC4~7: SVIGTC4066BP
  - IC8: SVIGTC40174B
- TRANSISTORS
  - Q1, 4, 7, 8: 2SC828AQRS
  - Q2, 3, 6: 2SA1015GR
  - Q5: 2SA798AFG2
- DIODES
  - D1~20: MA150IR

UPPER ORCHESTRAL PRESETS CIRCUIT BOARD (UOP)

SXPGA10071

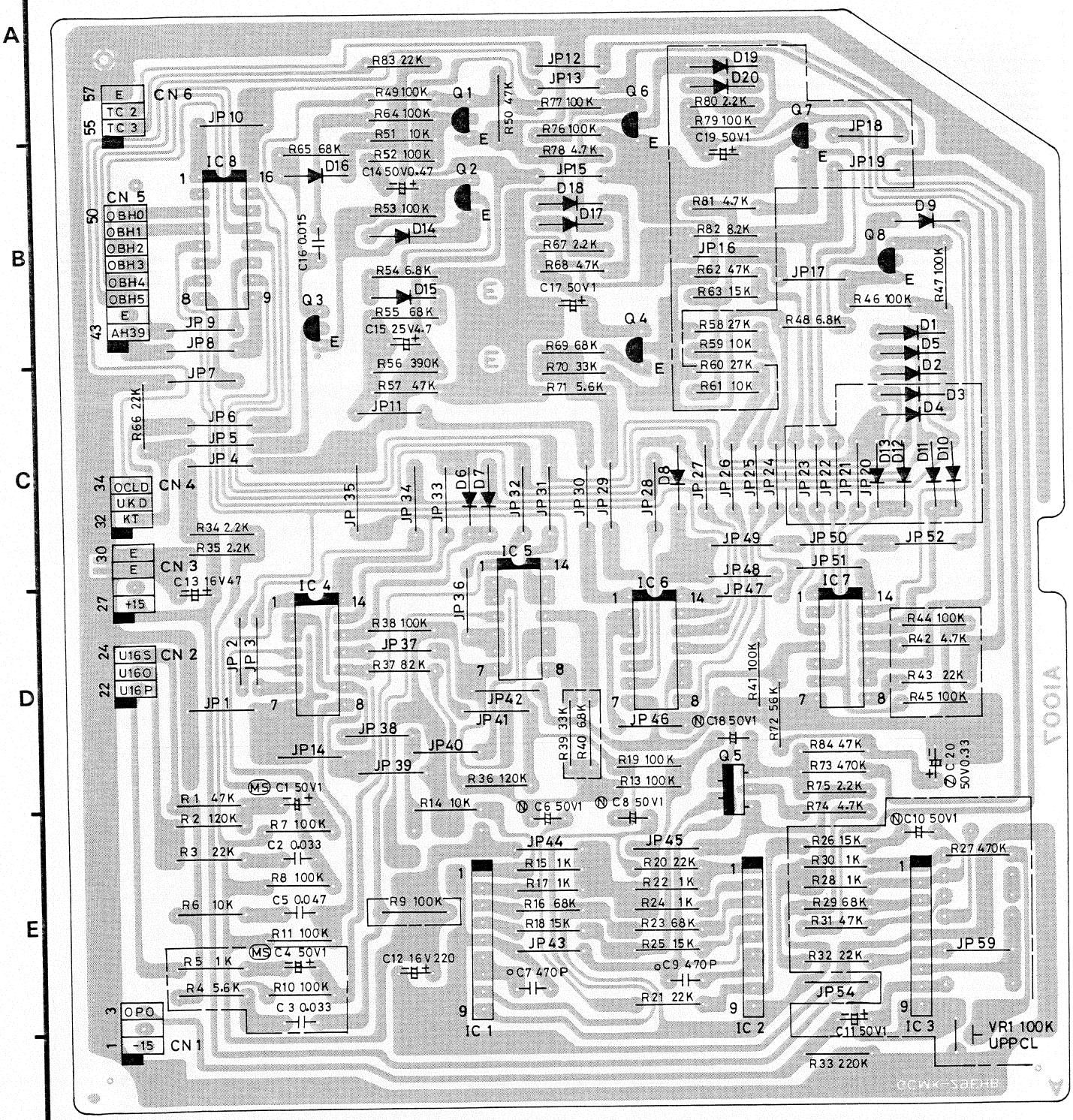

NOTES:

- IC'S
  - IC1~3: SVIGBA6110
  - IC4~7: SVIGTC4066BP
  - IC8: SVIGTC40174B
- TRANSISTORS
  - Q1, 4, 7, 8: 2SC828AQRS
  - Q2, 3, 6: 2SA1015GR
  - Q5: 2SA798AFG2
- DIODES
  - D1~20: MA150IR

PERCUSSIVE PRESETS CIRCUIT BOARD (PPR)

SXPGB10072

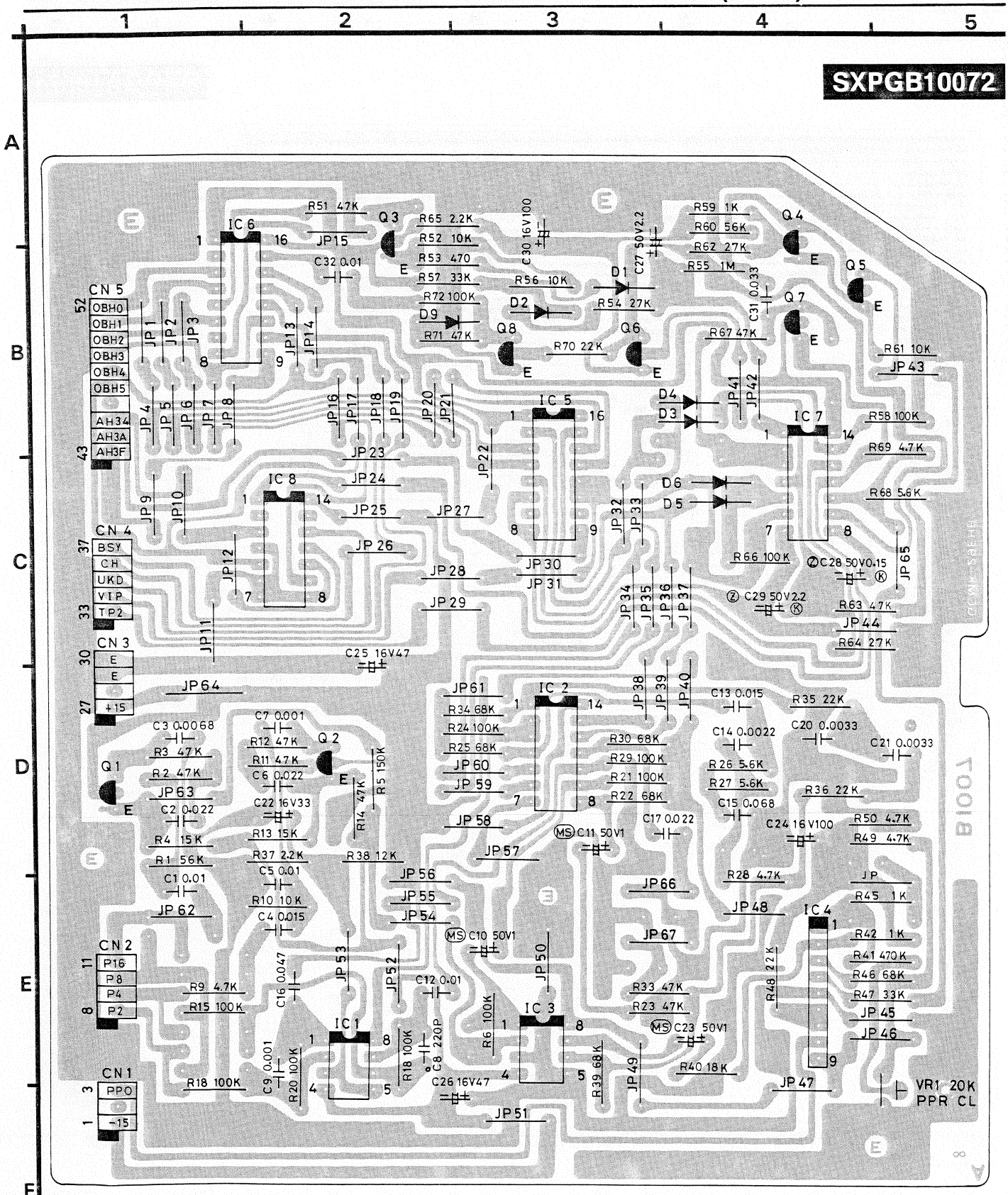

NOTES:

- IC'S
  - IC1, 3: AN6552F
  - IC2, 7: SVIGTC4066BP
  - IC4: SVIGBA6110
  - IC5, 6: SVIGTC40174B
  - IC8: SVIGTC4013BP
- TRANSISTORS
  - Q1, 2: 2SC1328T
  - Q3~5, 7, 8: 2SC828AQRS
  - Q6: 2SA1015GR
- DIODES
  - D1~6, 9: MA150IR

PERCUSSIVE PRESETS CIRCUIT DIAGRAM (PPR)

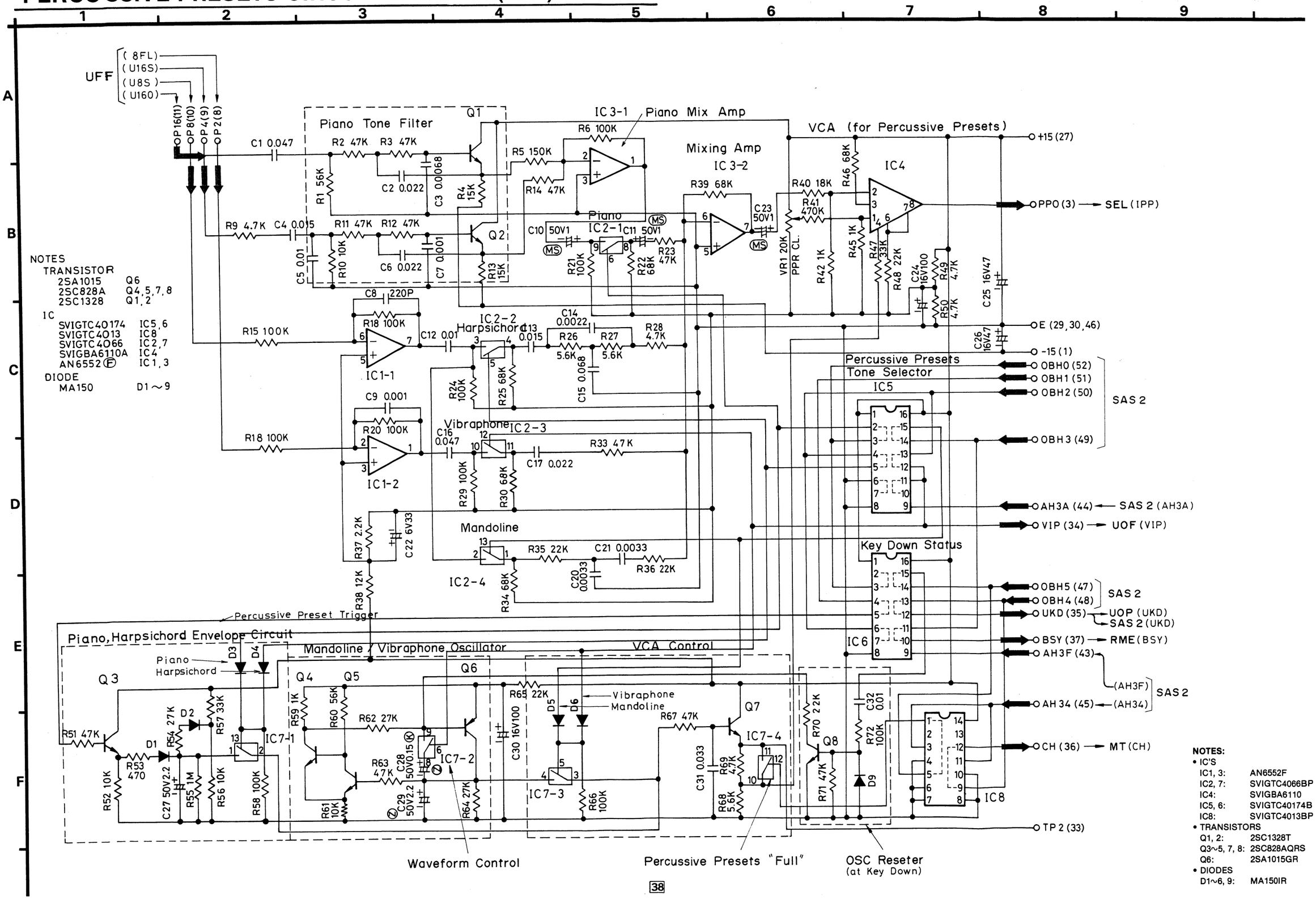

NOTES

TRANSISTOR

2SA1015	Q6
2SC828A	Q4, 5, 7, 8
2SC1328	Q1, 2

IC

SVIGTC40174	IC5, 6
SVIGTC4013	IC8
SVIGTC4066	IC2, 7
SVIGBA6110A	IC4
AN6552 (F)	IC1, 3

DIODE

MA150	D1 ~ 9

NOTES:

- IC'S

IC1, 3:	AN6552F
IC2, 7:	SVIGTC4066BP
IC4:	SVIGBA6110
IC5, 6:	SVIGTC40174B
IC8:	SVIGTC4013BP

- TRANSISTORS

Q1, 2:	2SC1328T
Q3~5, 7, 8:	2SC828AQRS
Q6:	2SA1015GR

- DIODES

D1~6, 9:	MA150IR

SOLO 1 CIRCUIT DIAGRAM (SOL1)

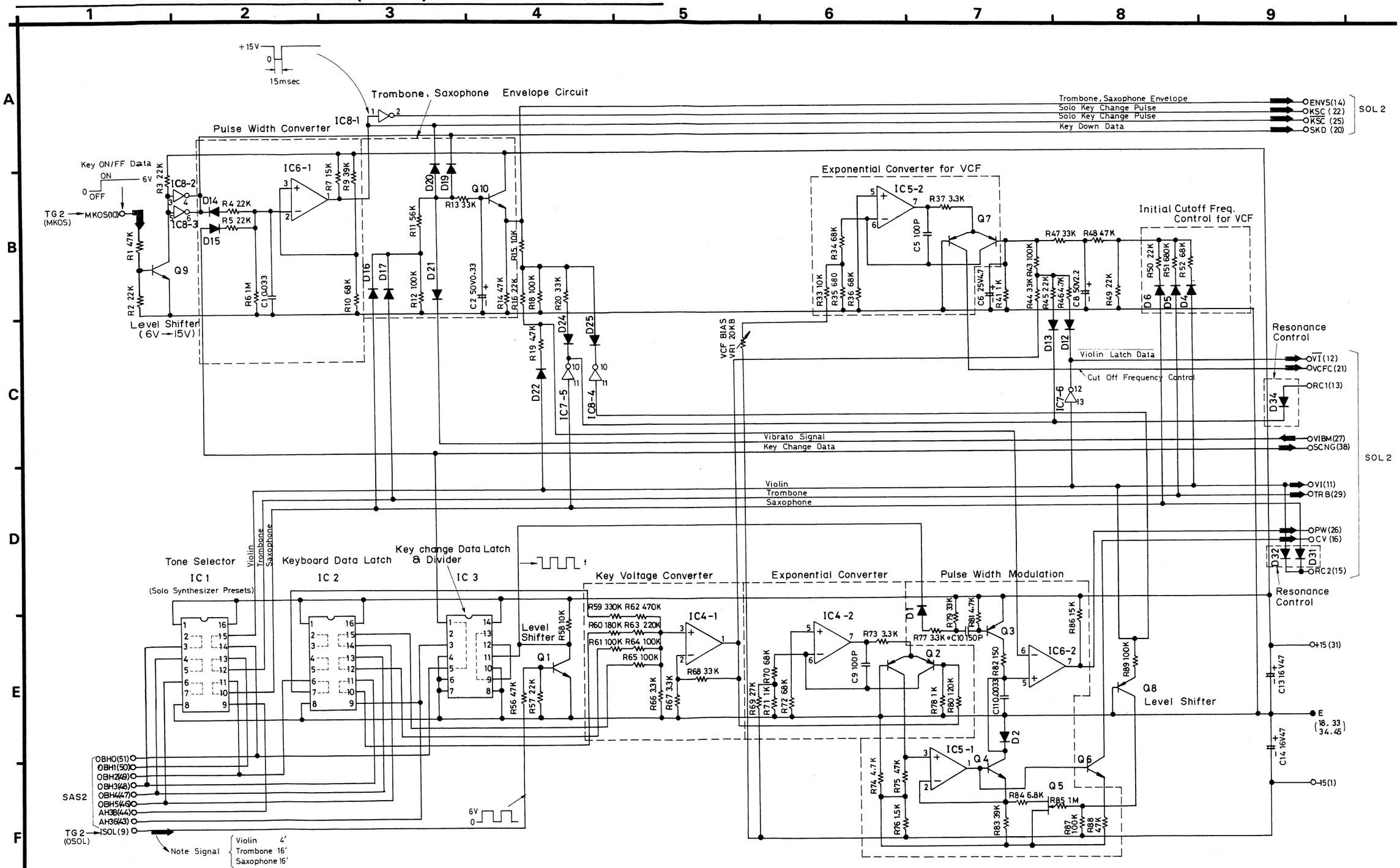

NOTES:

- IC'S

IC1, 2:	SVIGTC40174B
IC3:	SVIGTC4013BP
IC4, 5:	AN6552
IC6:	AN6914
IC7, 8:	SVIGTC4069BP

- TRANSISTORS:

Q1, 4, 6, 9, 10:	2SC828AQRS
Q2, 7:	2SA798AFG2
Q3, 8:	2SA1015GR
Q5:	2SK117BL

- DIODES

D1, 2, 4~6, 12~17, 19~22, 24, 25, 31, 32, 34:	MA150IR

SOLO 1 CIRCUIT BOARD (SOL1)

SXPGA10082

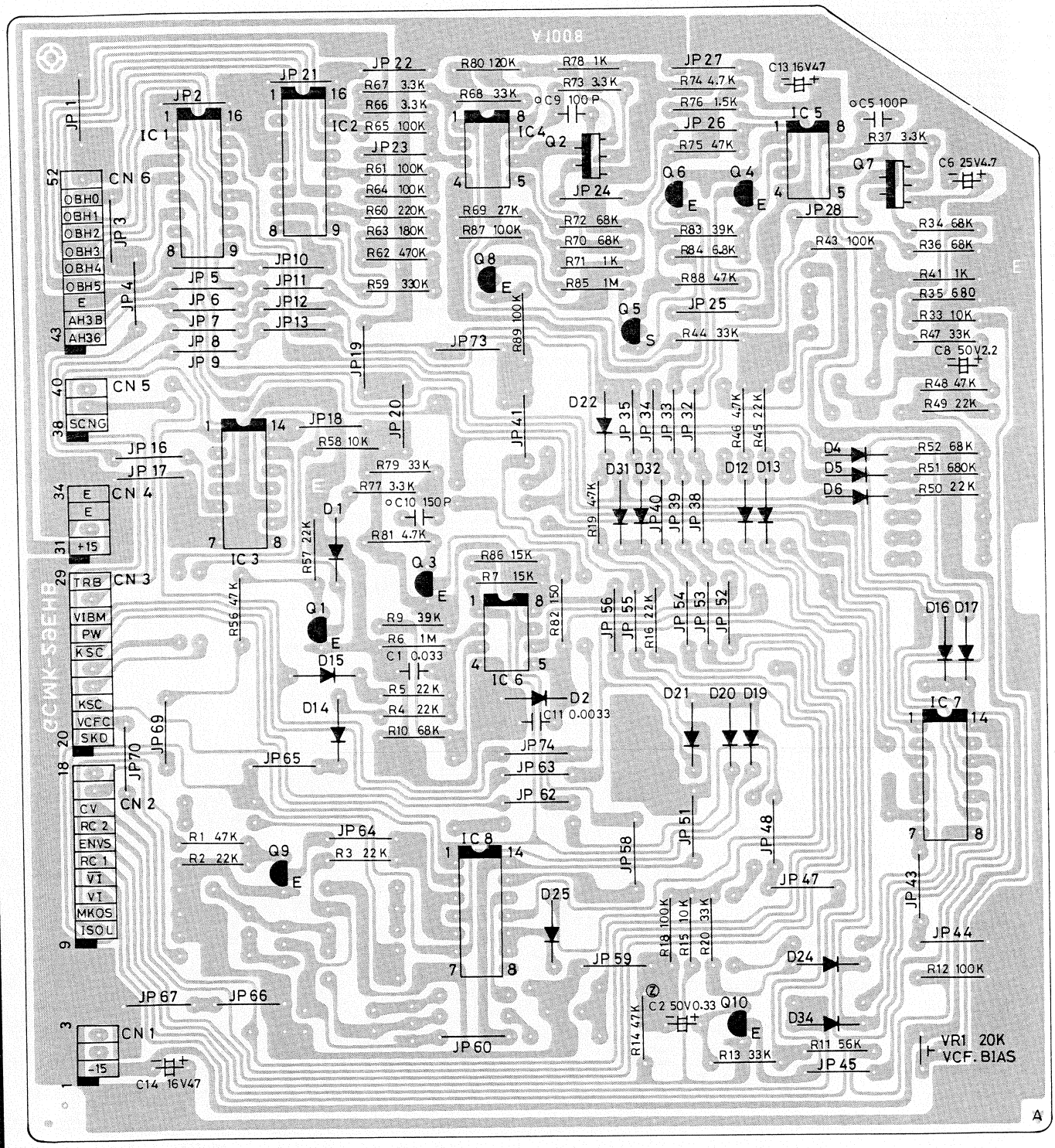

NOTES:

- IC'S

IC1, 2:	SVIGTC40174B
IC3:	SVIGTC4013BP
IC4, 5:	AN6552
IC6:	AN6914
IC7, 8:	SVIGTC4069BP

- TRANSISTORS:

Q1, 4, 6, 9, 10:	2SC828AQRS
Q2, 7:	2SA798AFG2
Q3, 8:	2SA1015GR
Q5:	2SK117BL

- DIODES

D1, 2, 4~6, 12~17, 19~22, 24, 25, 31, 32, 34:	MA150IR

SOLO 2 CIRCUIT BOARD (SOL2)

SXPGB10082

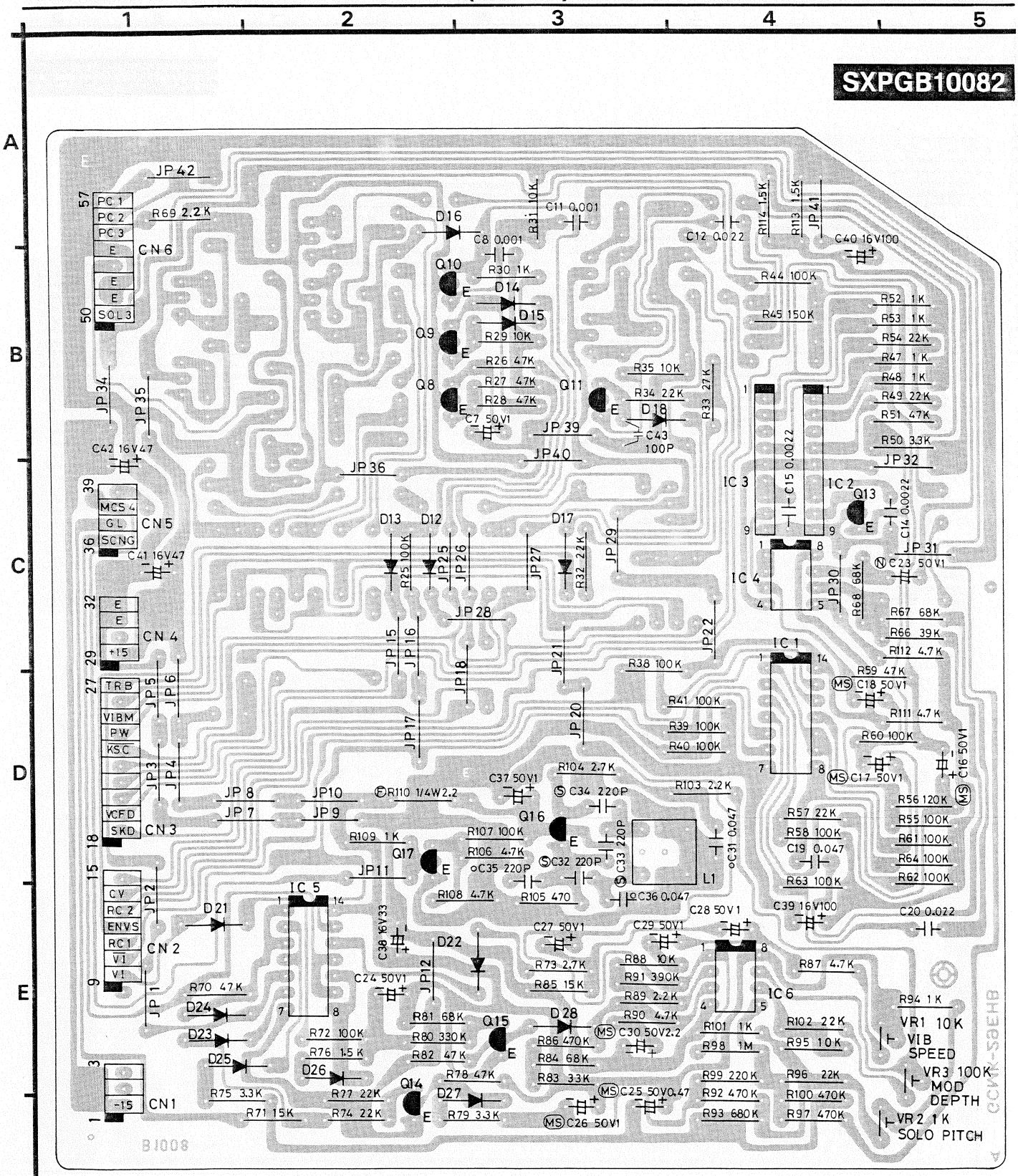

NOTES:

- IC'S

IC1:	SVIGTC4066BP
IC2, 3:	SVIGBA6110
IC4, 6:	AN6552
IC5:	SVIGTC4069BP

- TRANSISTORS

Q8~11, 13, 14:	2SC828AQRS
Q15:	2SA1015GR
Q16, 17:	2SC1047C

- DIODES

D12~18, 21~28:	MA150IR

SOLO 2 CIRCUIT DIAGRAM (SOL2)

NOTES:

- IC'S
  - IC1: SVIGTC4066BP
  - IC2, 3: SVIGBA6110
  - IC4, 6: AN6552
  - IC5: SVIGTC4069BP
- TRANSISTORS
  - Q8~11, 13, 14: 2SC828AQRS
  - Q15: 2SA1015GR
  - Q16, 17: 2SC1047C
- DIODES
  - D12~18, 21~28: MA150IR

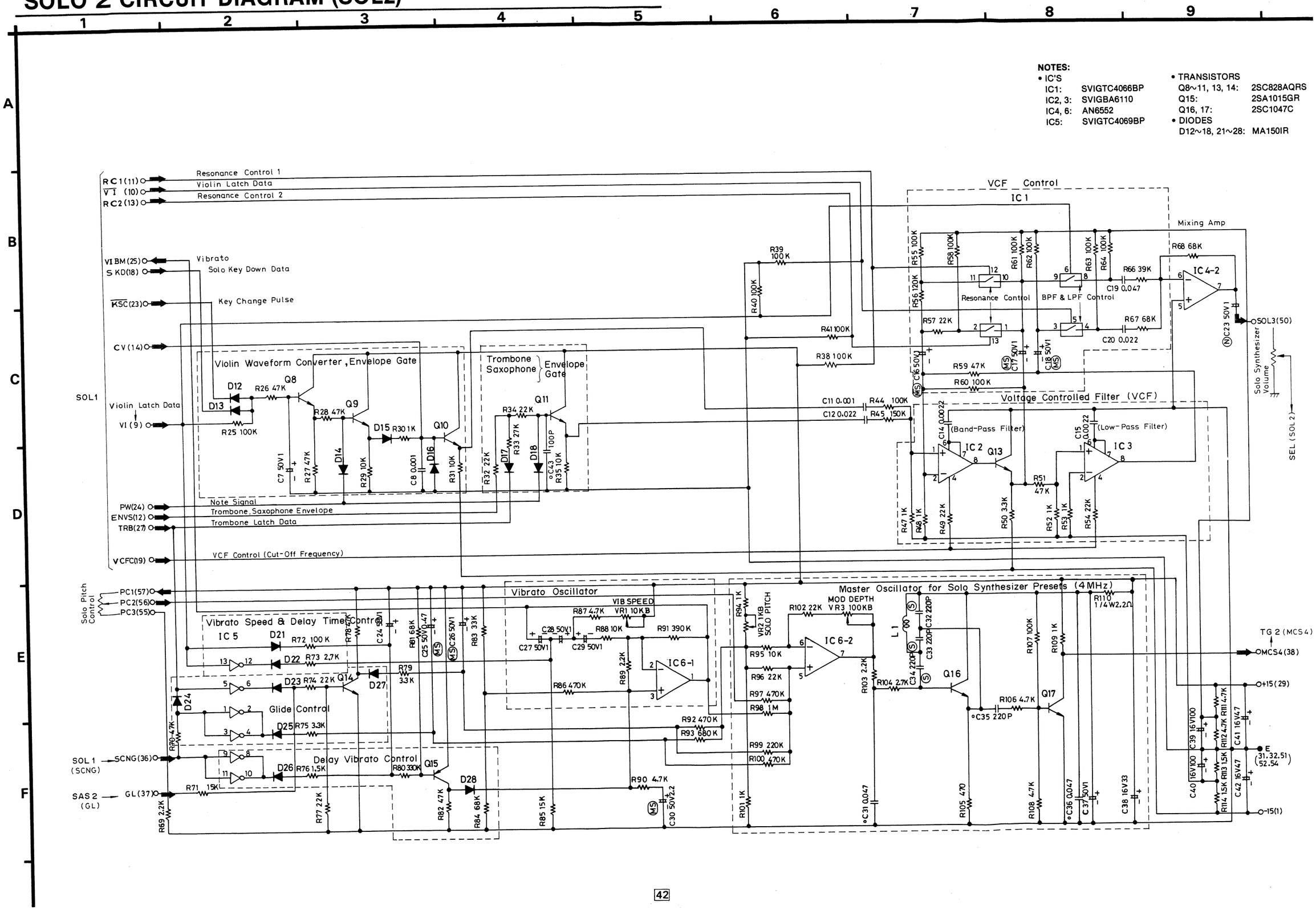

PEDAL TONE FILTER CIRCUIT DIAGRAM (PTF)

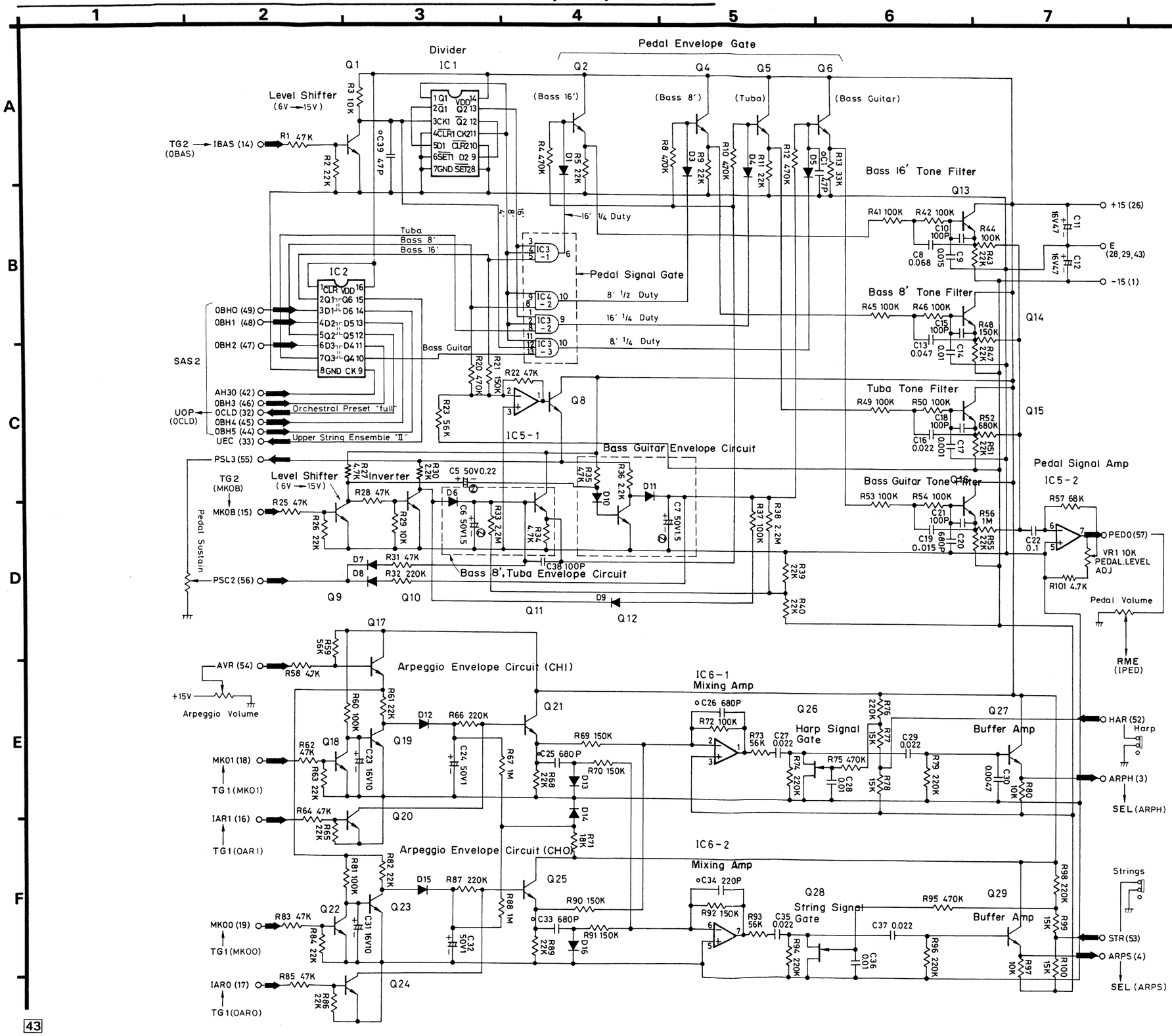

NOTES:

- IC'S

IC1:	SVIGTC4013BP
IC2:	SVIGTC40174B
IC3:	SVIGTC4073BP
IC4:	SVIGTC4081BP
IC5, 6:	AN6552F

- TRANSISTORS

Q1, 2, 4~6, 8~12, 17~25:	2SC828AQRS
Q13~16, 27, 29:	2SC1328T
Q26, 28:	2SK117BL

- DIODES

D1, 3~16:	MA150IR

PEDAL TONE FILTER CIRCUIT BOARD (PTF)

SXPGA10091

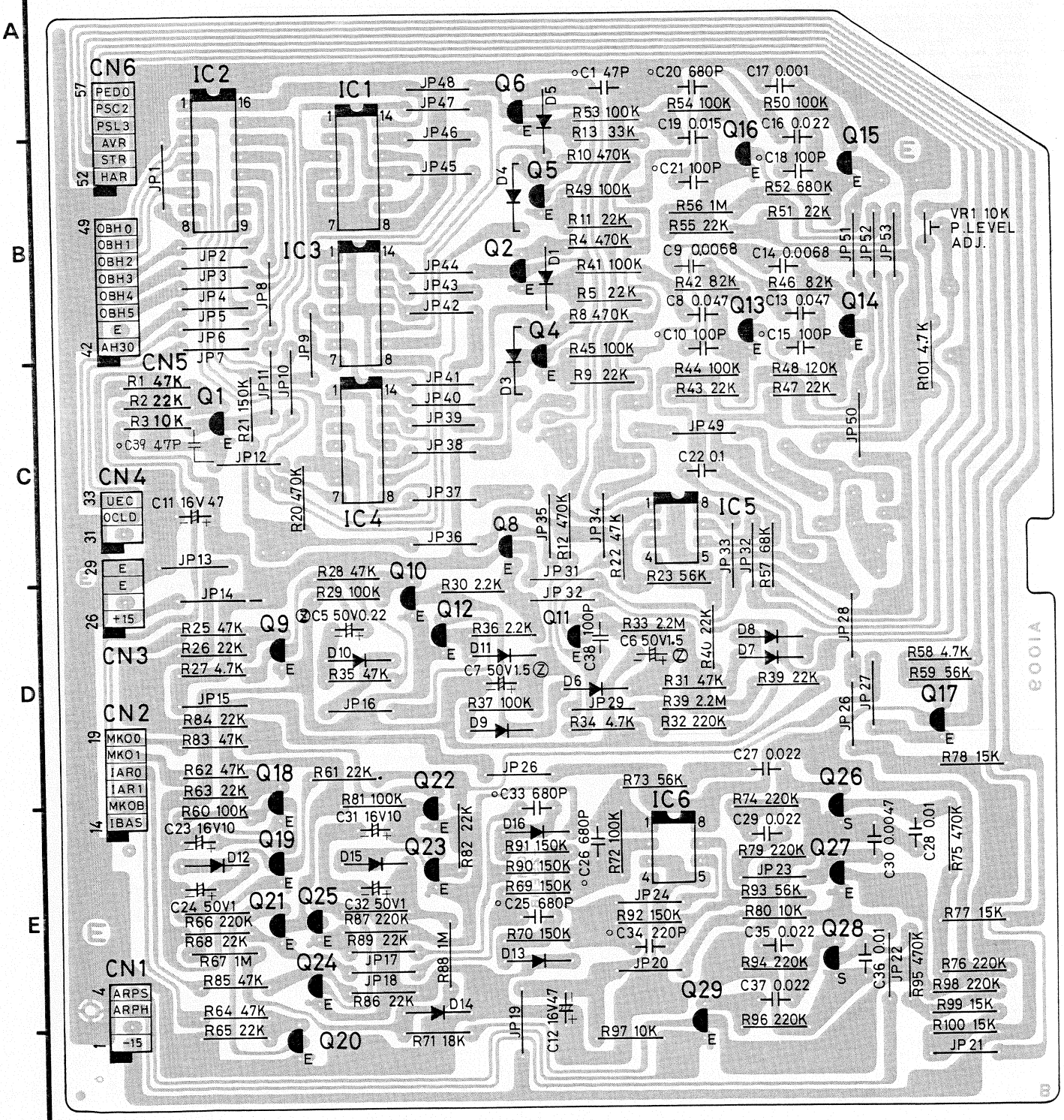

NOTES:

- IC'S

IC1:	SVIGTC4013BP
IC2:	SVIGTC40174B
IC3:	SVIGTC4073BP
IC4:	SVIGTC4081BP
IC5, 6:	AN6552F

- TRANSISTORS

Q1, 2, 4~6, 8~12, 17~25:	2SC828AQRS
Q13~16, 27, 29:	2SC1328T
Q26, 28:	2SK117BL

- DIODES

D1, 3~16:	MA150IR

MULTI TREMOLO CIRCUIT BOARD (MT)

SXPGB10091

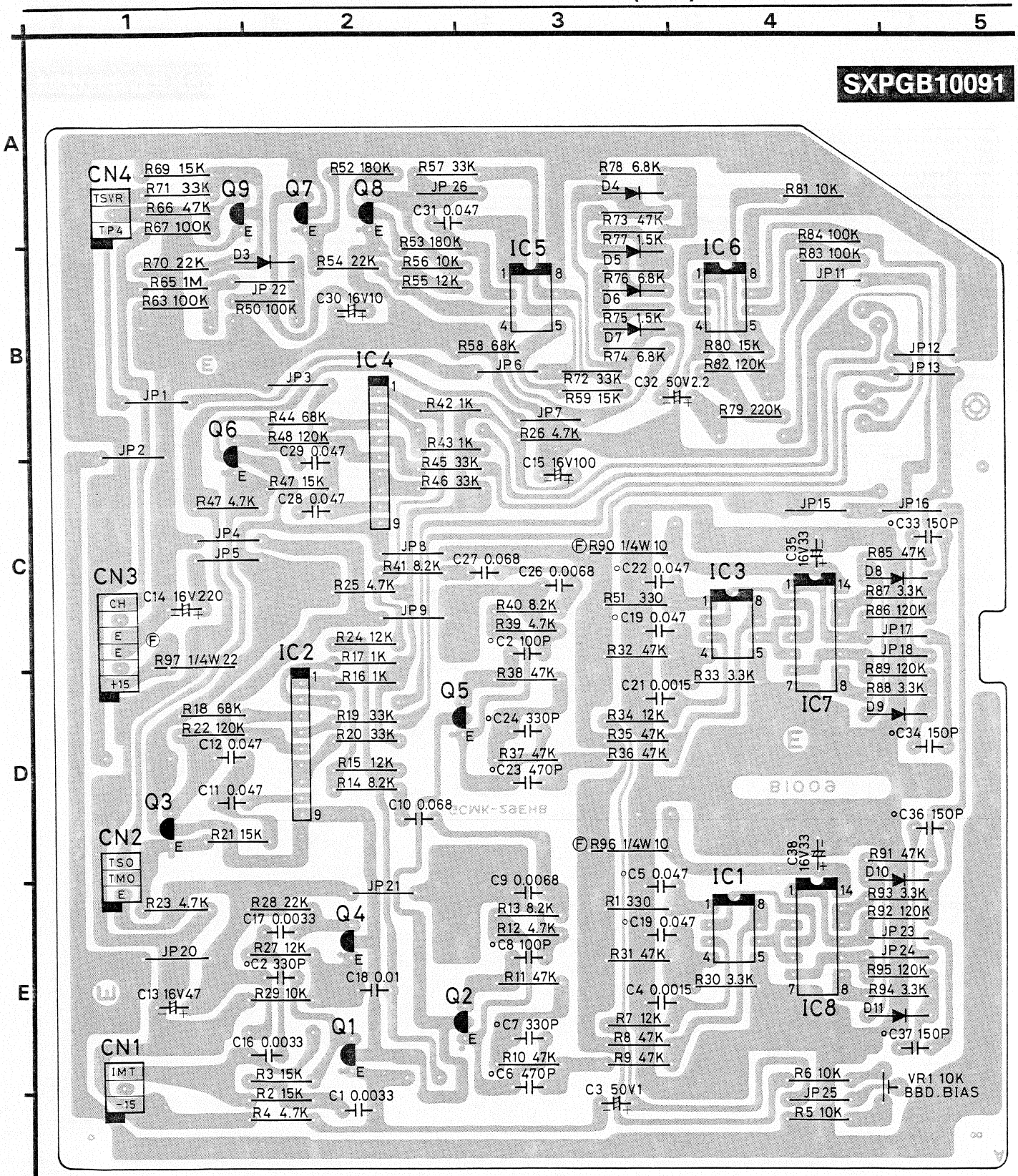

NOTES:

- IC'S
  - IC1, 3: MN3006
  - IC2, 4: SVIGBA6110
  - IC5, 6: AN6552
  - IC7, 8: SVIGMSM4011
- TRANSISTORS
  - Q1~6: 2SC1328ST
  - Q7~9: 2SC828T
- DIODES
  - D3~11: MA150IR

MULTI TREMOLO CIRCUIT DIAGRAM (MT)

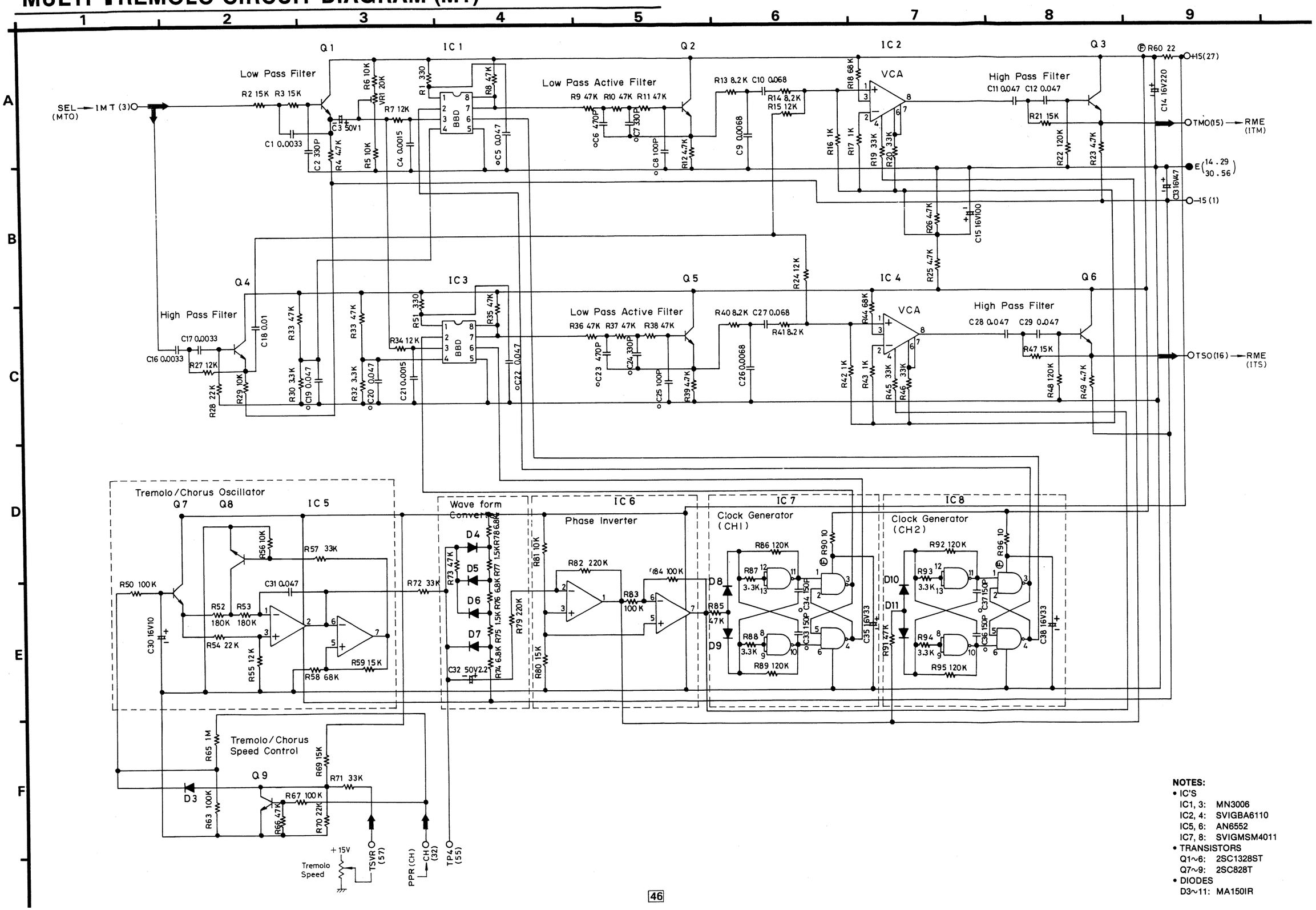

NOTES:

- IC'S
  - IC1, 3: MN3006
  - IC2, 4: SVIGBA6110
  - IC5, 6: AN6552
  - IC7, 8: SVIGMSM4011
- TRANSISTORS
  - Q1~6: 2SC1328ST
  - Q7~9: 2SC828T
- DIODES
  - D3~11: MA150IR

STRING ENSEMBLE CIRCUIT DIAGRAM (STE)

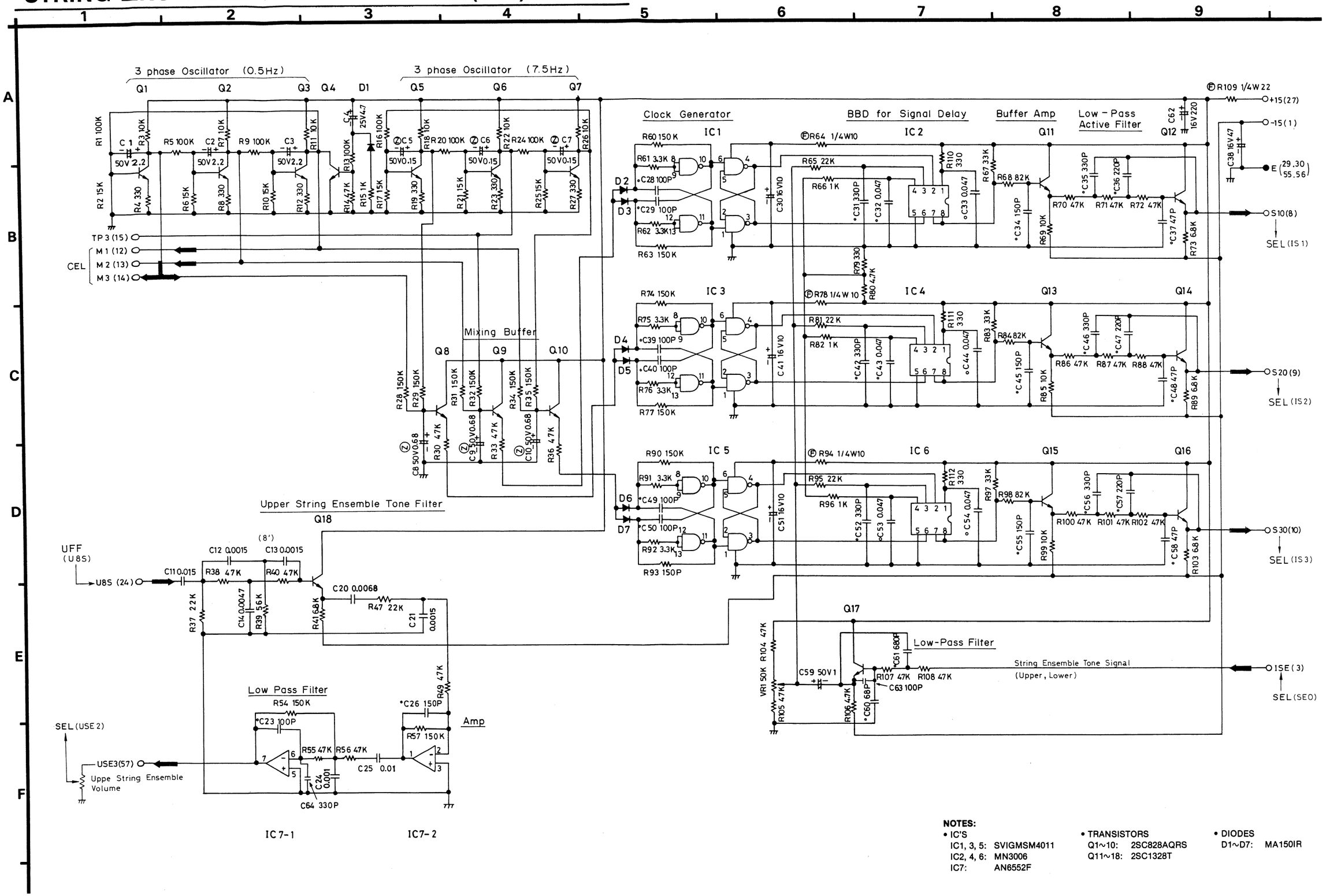

NOTES:

- IC'S
  - IC1, 3, 5: SVIGMSM4011
  - IC2, 4, 6: MN3006
  - IC7: AN6552F
- TRANSISTORS
  - Q1~10: 2SC828AQRS
  - Q11~18: 2SC1328T
- DIODES
  - D1~D7: MA150IR

STRING ENSEMBLE CIRCUIT BOARD (STE)

SXPG10103

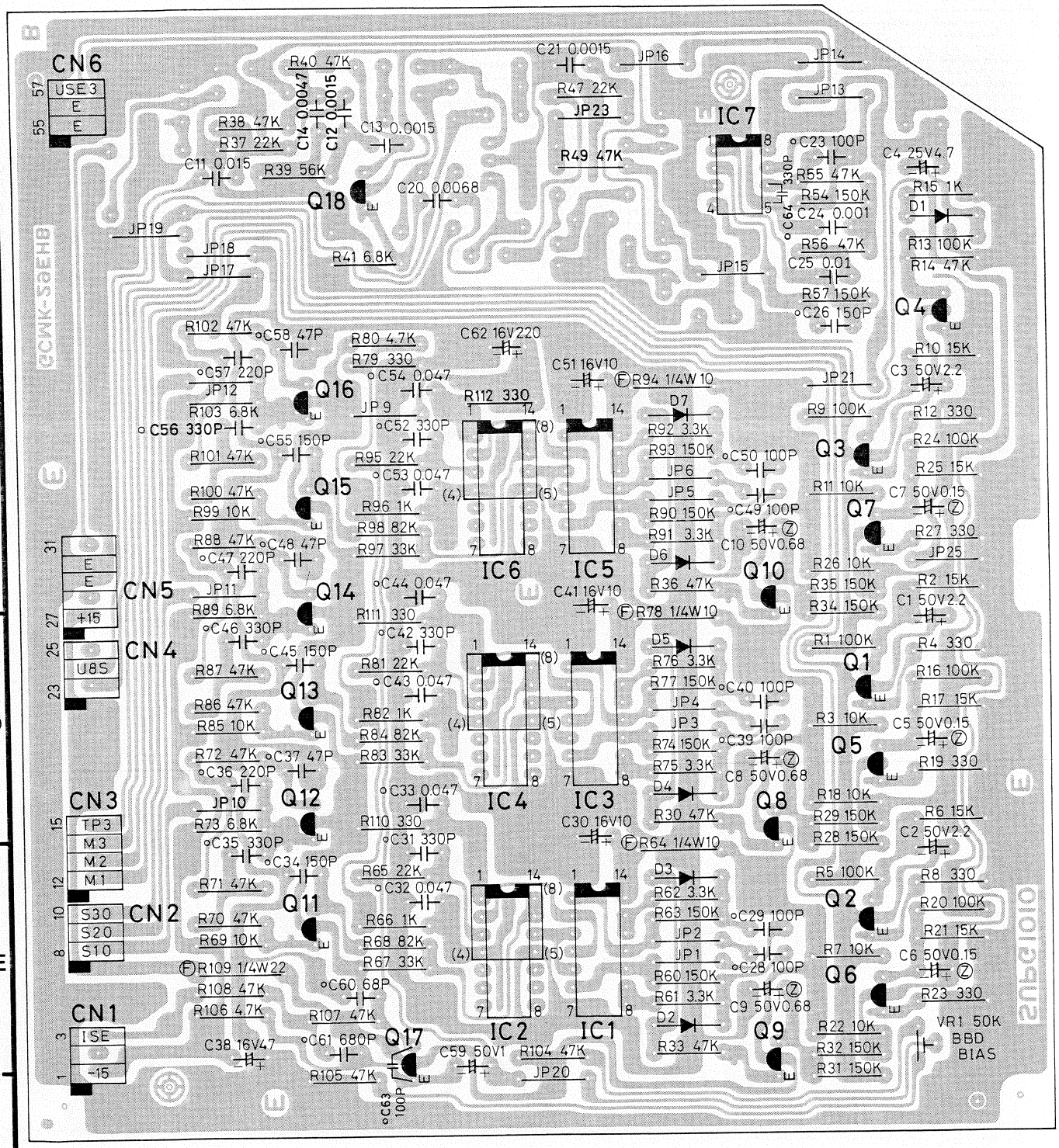

NOTES:

- IC'S
  - IC1, 3, 5: SVIGMSM4011
  - IC2, 4, 6: MN3006
  - IC7: AN6552F
- TRANSISTORS
  - Q1~10: 2SC828AQRS
  - Q11~18: 2SC1328T
- DIODES
  - D1~D7: MA150IR

CELESTE CIRCUIT BOARD (CEL)

SXPG10102

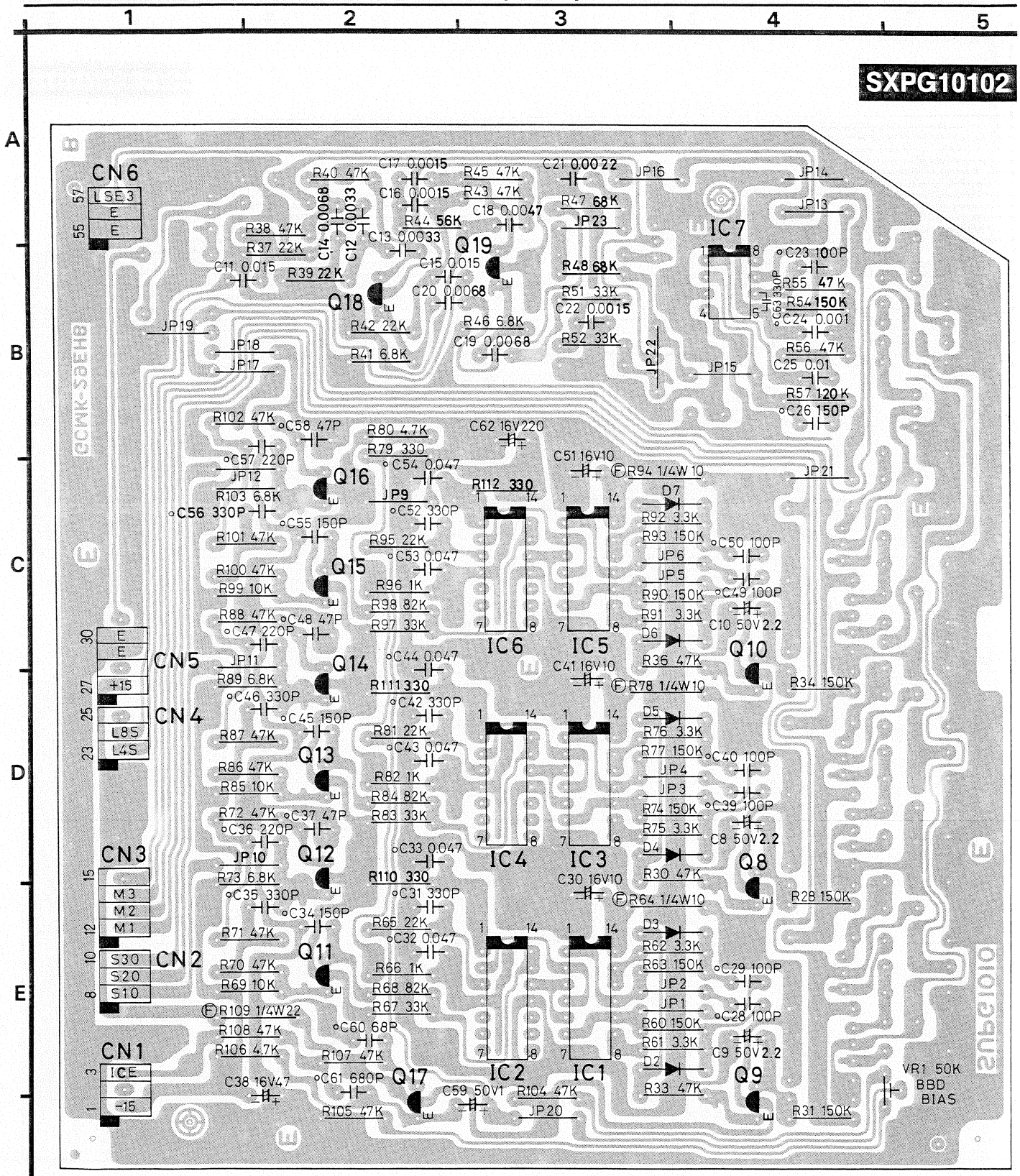

NOTES:

- IC'S
  - IC1, 3, 5: SVIGMSM4011
  - IC2, 4, 6: MN3004
  - IC7: AN6552F
- TRANSISTORS
  - Q8~10: 2SC828AQRS
  - Q11~19: 2SC1328T
- DIODES
  - D2~7: MA150IR

CELESTE CIRCUIT DIAGRAM (CEL)

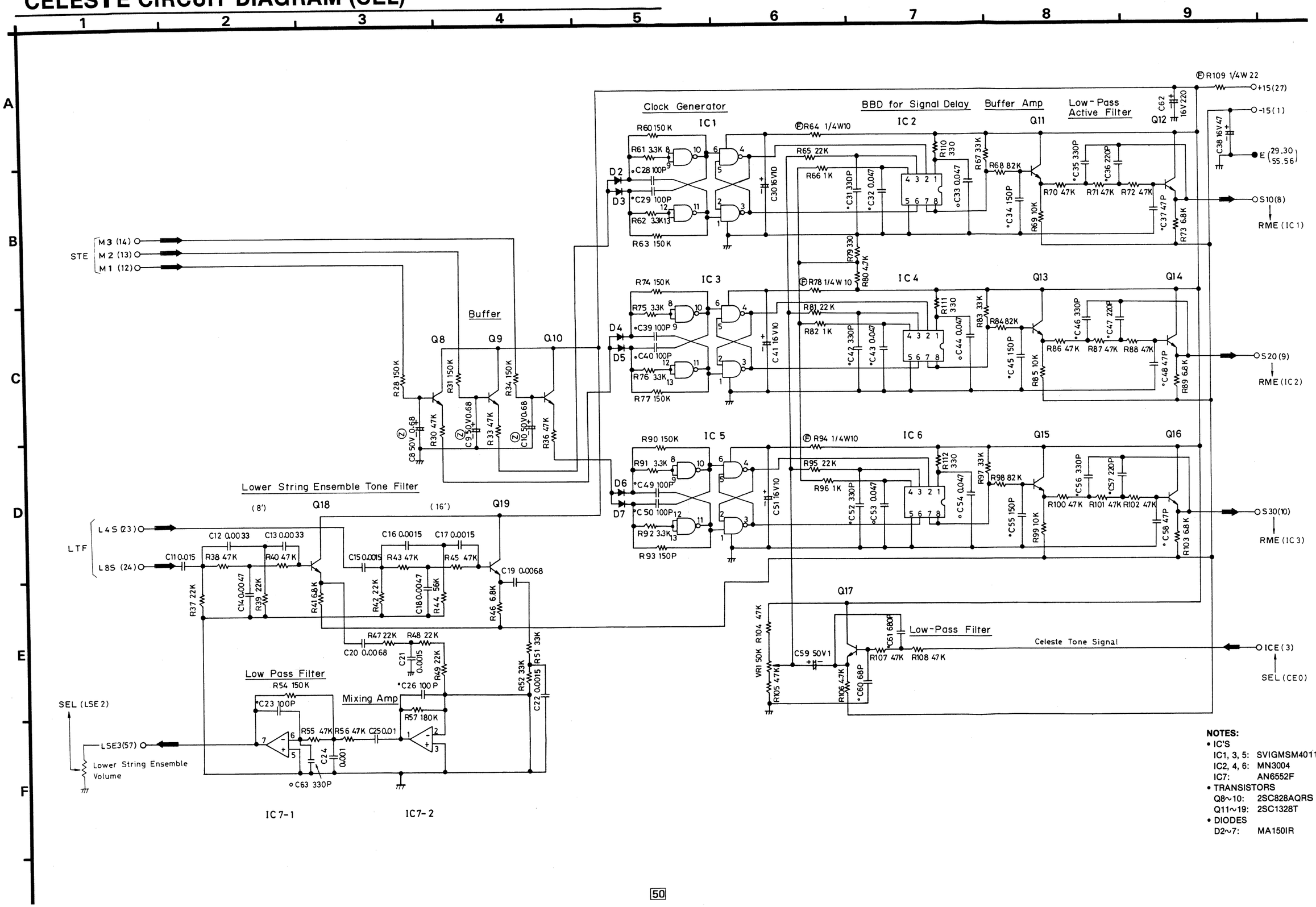

NOTES:

- IC'S
  - IC1, 3, 5: SVIGMSM4011
  - IC2, 4, 6: MN3004
  - IC7: AN6552F
- TRANSISTORS
  - Q8~10: 2SC828AQRS
  - Q11~19: 2SC1328T
- DIODES
  - D2~7: MA150IR

REVERB, MIXING CIRCUIT DIAGRAM (RME)

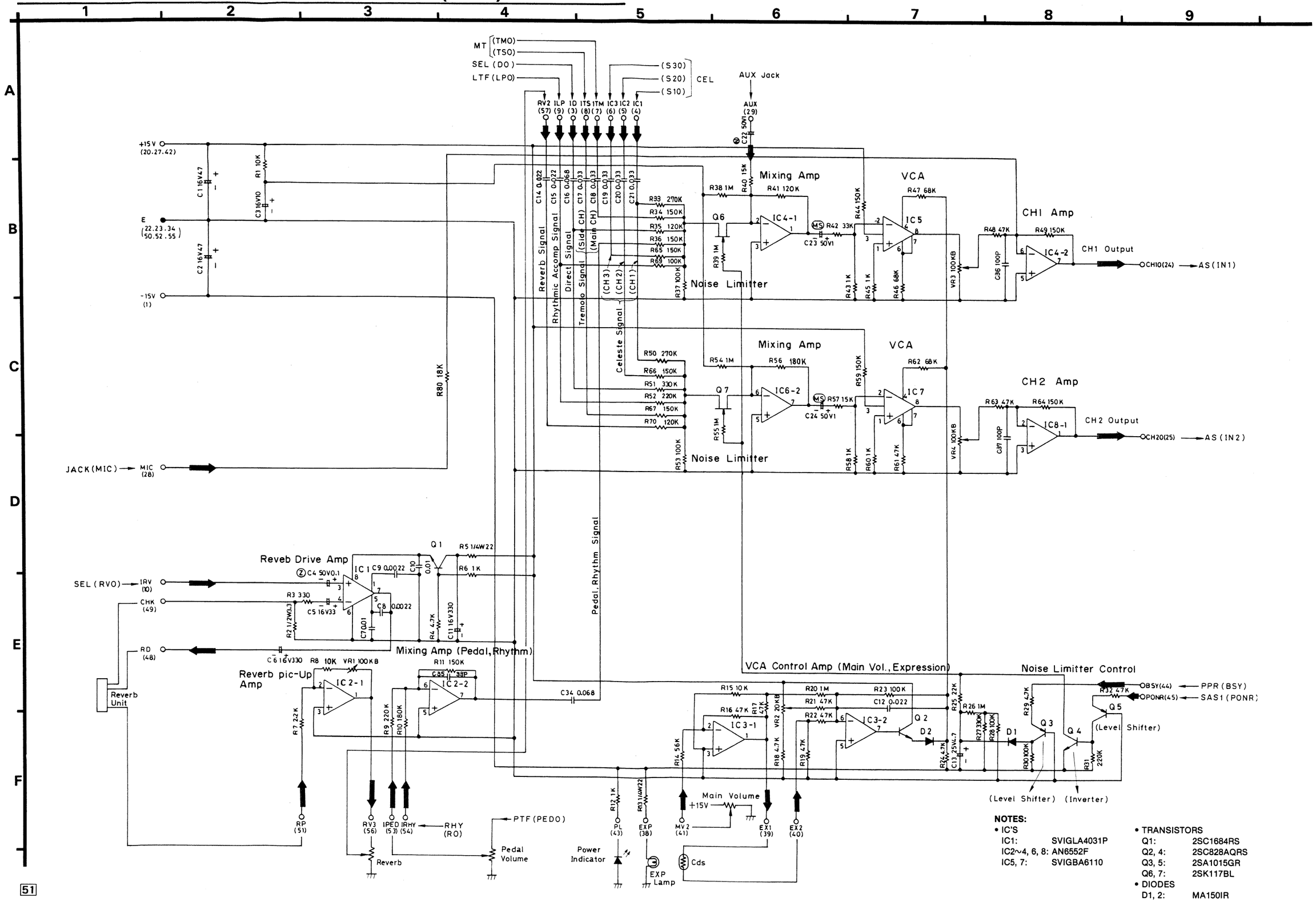

NOTES:

- IC'S

IC1:	SVIGLA4031P
IC2~4, 6, 8:	AN6552F
IC5, 7:	SVIGBA6110

- TRANSISTORS

Q1:	2SC1684RS
Q2, 4:	2SC828AQRS
Q3, 5:	2SA1015GR
Q6, 7:	2SK117BL

- DIODES

D1, 2:	MA150IR

REVERB, MIXING CIRCUIT BOARD (RME)

SXPG10112

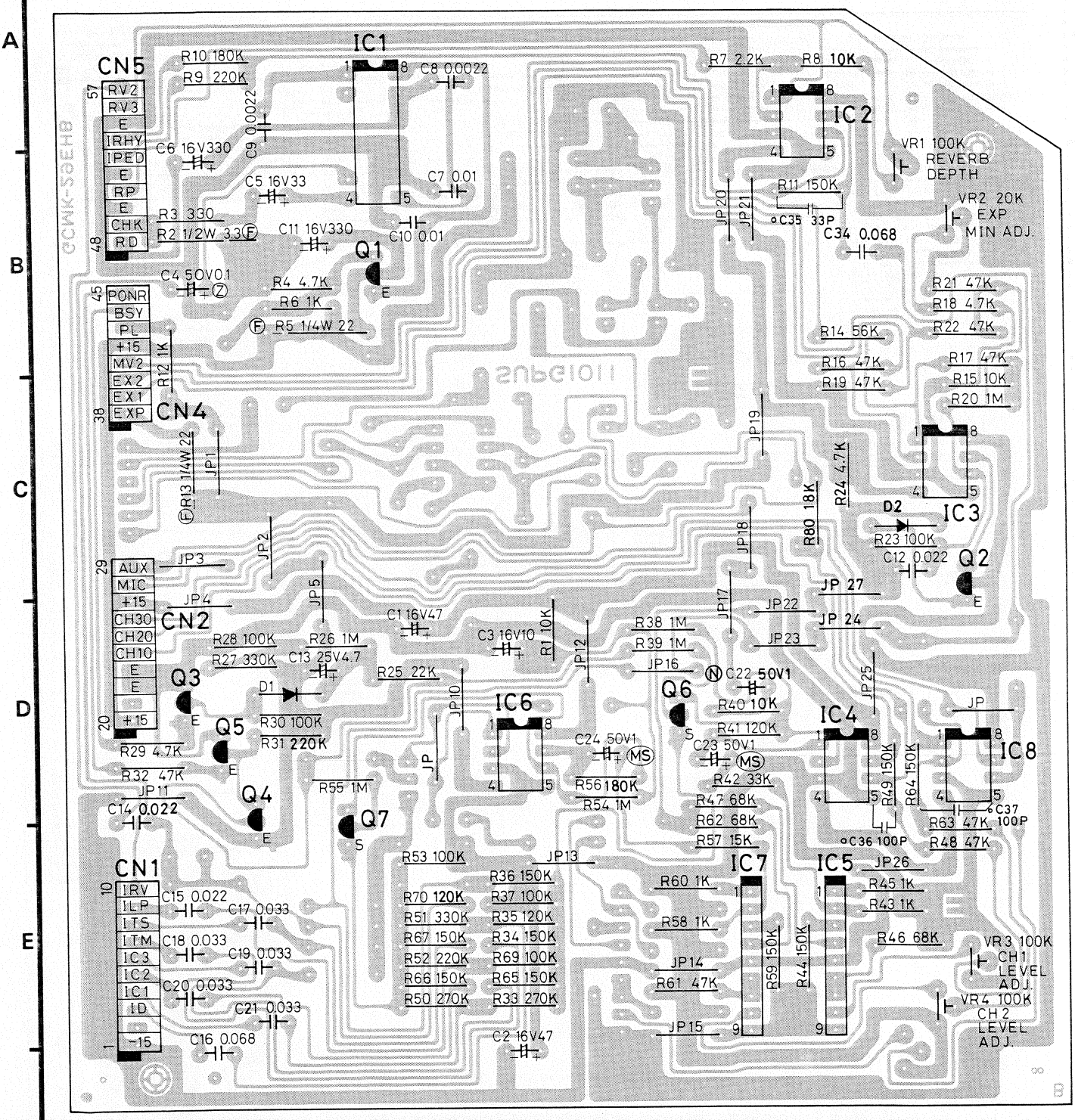

NOTES:

- IC'S
  - IC1: SVIGLA4031P
  - IC2~4, 6, 8: AN6552F
  - IC5, 7: SVIGBA6110
- TRANSISTORS
  - Q1: 2SC1684RS
  - Q2, 4: 2SC828AQRS
  - Q3, 5: 2SA1015GR
  - Q6, 7: 2SK117BL
- DIODES
  - D1, 2: MA150IR

AUTO PLAY CHORD SWITCH CIRCUIT BOARD (APCS)

SXPG10191

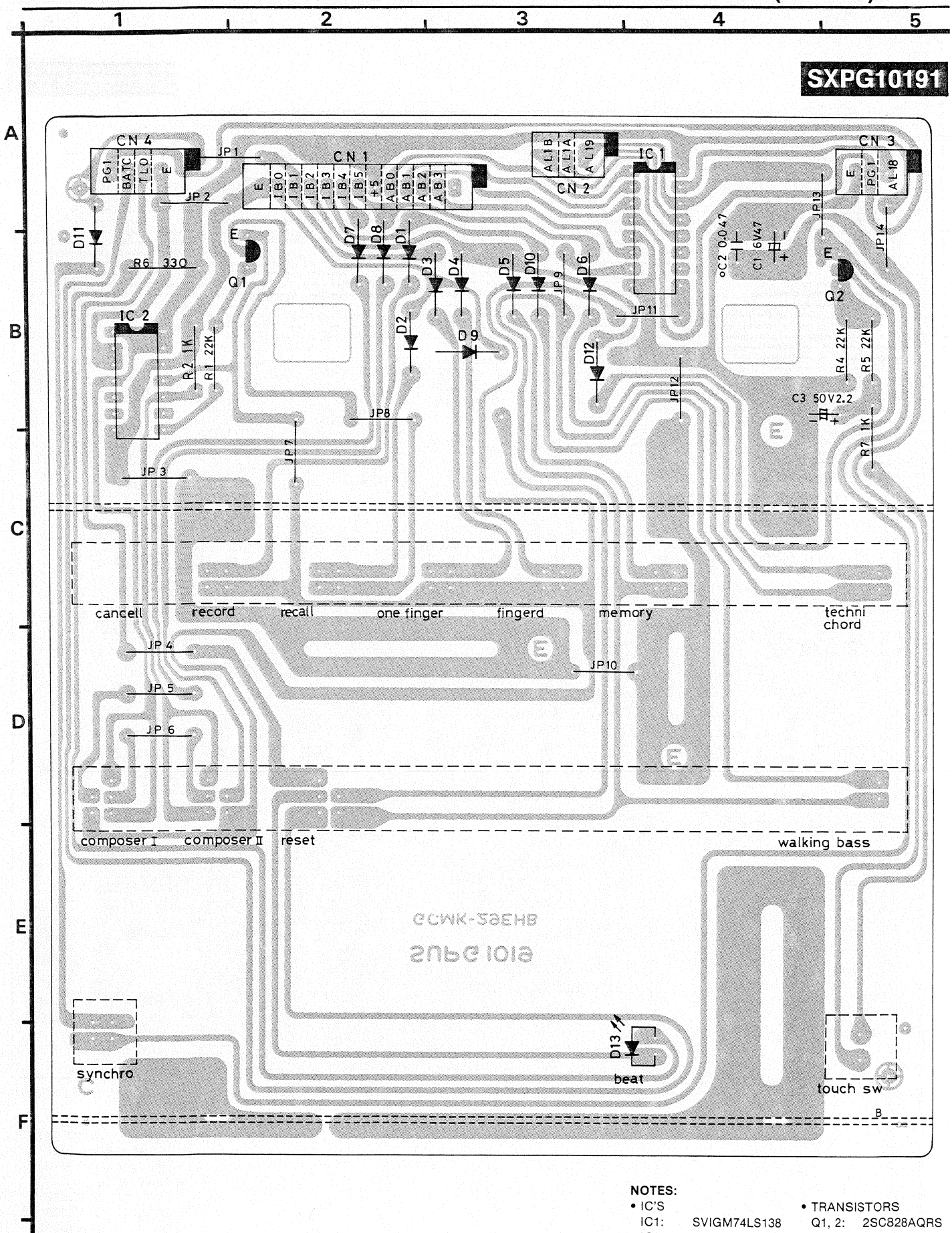

NOTES:

- IC'S
  - IC1: SVIGM74LS138
  - IC2: SVIGM74LS74
- TRANSISTORS
  - Q1, 2: 2SC828AQRS
- DIODES
  - D1~12: MA150IR
  - D13: SVDGSLR54UTA

AUTO PLAY CHORD SWITCH CIRCUIT DIAGRAM (APCS)

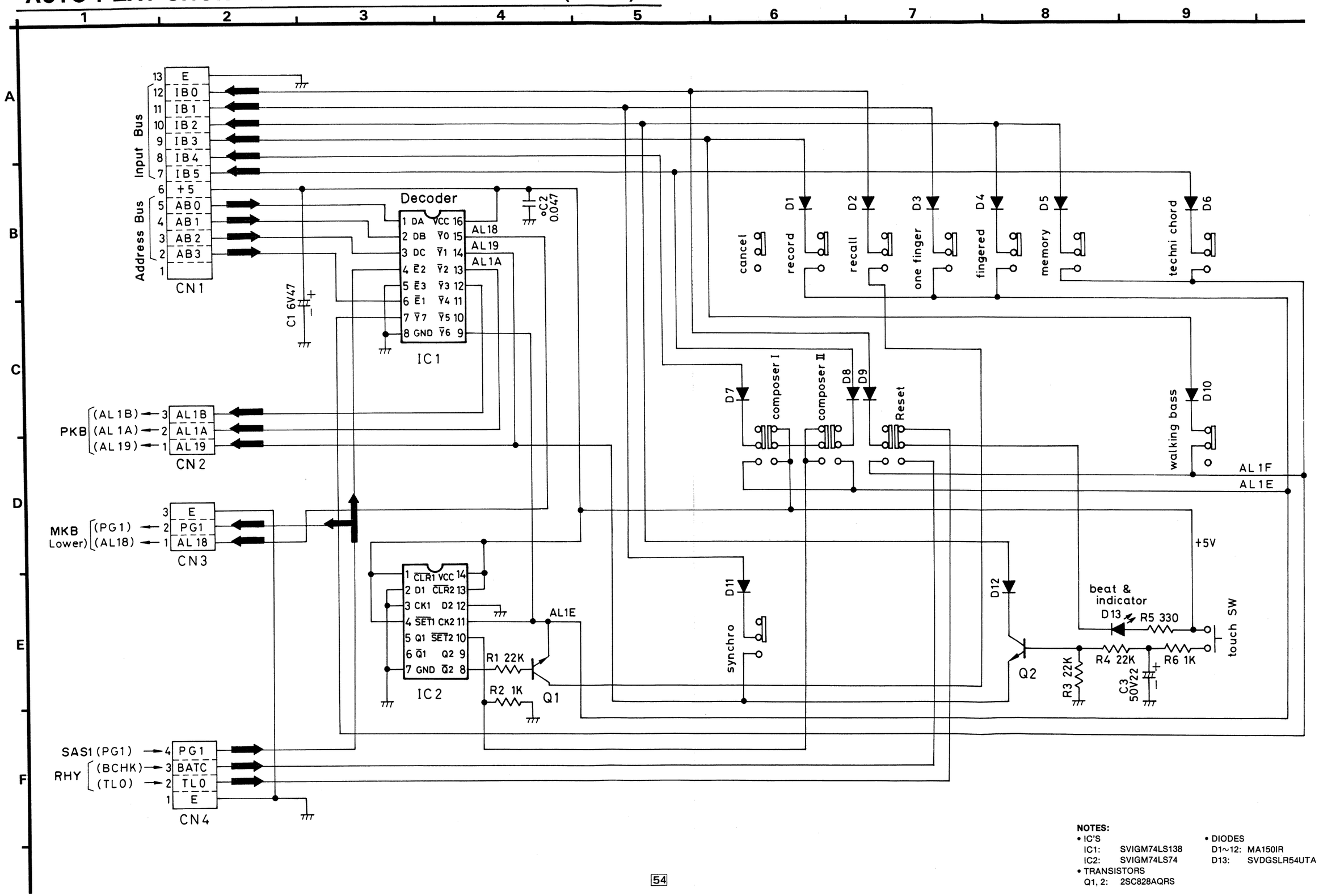

NOTES:

- IC'S
  - IC1: SVIGM74LS138
  - IC2: SVIGM74LS74
- TRANSISTORS
  - Q1, 2: 2SC828AQRS
- DIODES
  - D1~12: MA150IR
  - D13: SVDGSLR54UTA

RHYTHM CIRCUIT DIAGRAM (RHY)

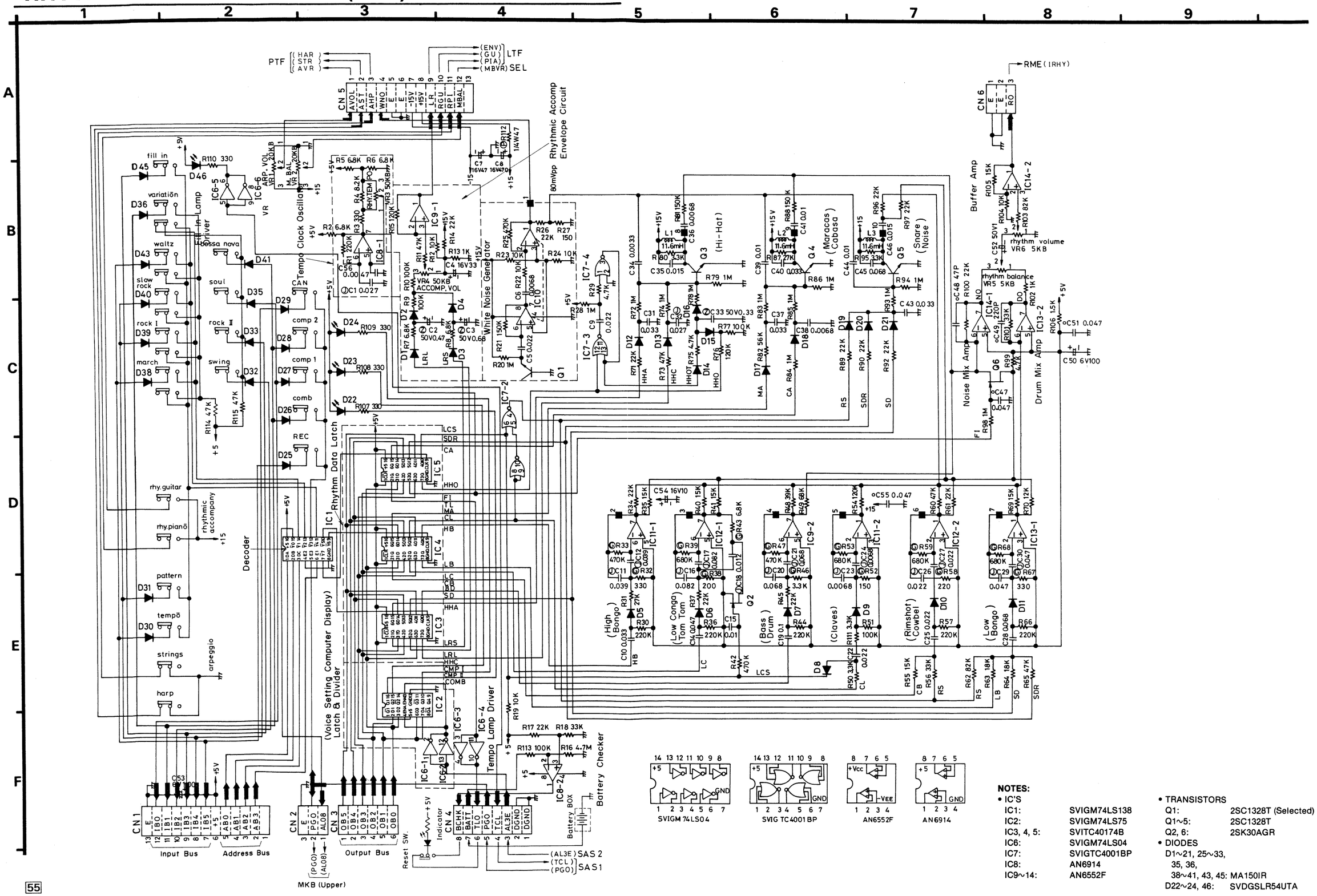

NOTES:

- IC'S

IC1:	SVIGM74LS138
IC2:	SVIGM74LS75
IC3, 4, 5:	SVITC40174B
IC6:	SVIGM74LS04
IC7:	SVIGTC4001BP
IC8:	AN6914
IC9~14:	AN6552F

- TRANSISTORS

Q1:	2SC1328T (Selected)
Q1~5:	2SC1328T
Q2, 6:	2SK30AGR

- DIODES

D1~21, 25~33, 35, 36, 38~41, 43, 45: MA150IR
D22~24, 46: SVDGSLR54UTA

RHYTHM CIRCUIT BOARD (RHY)

SXPG10171

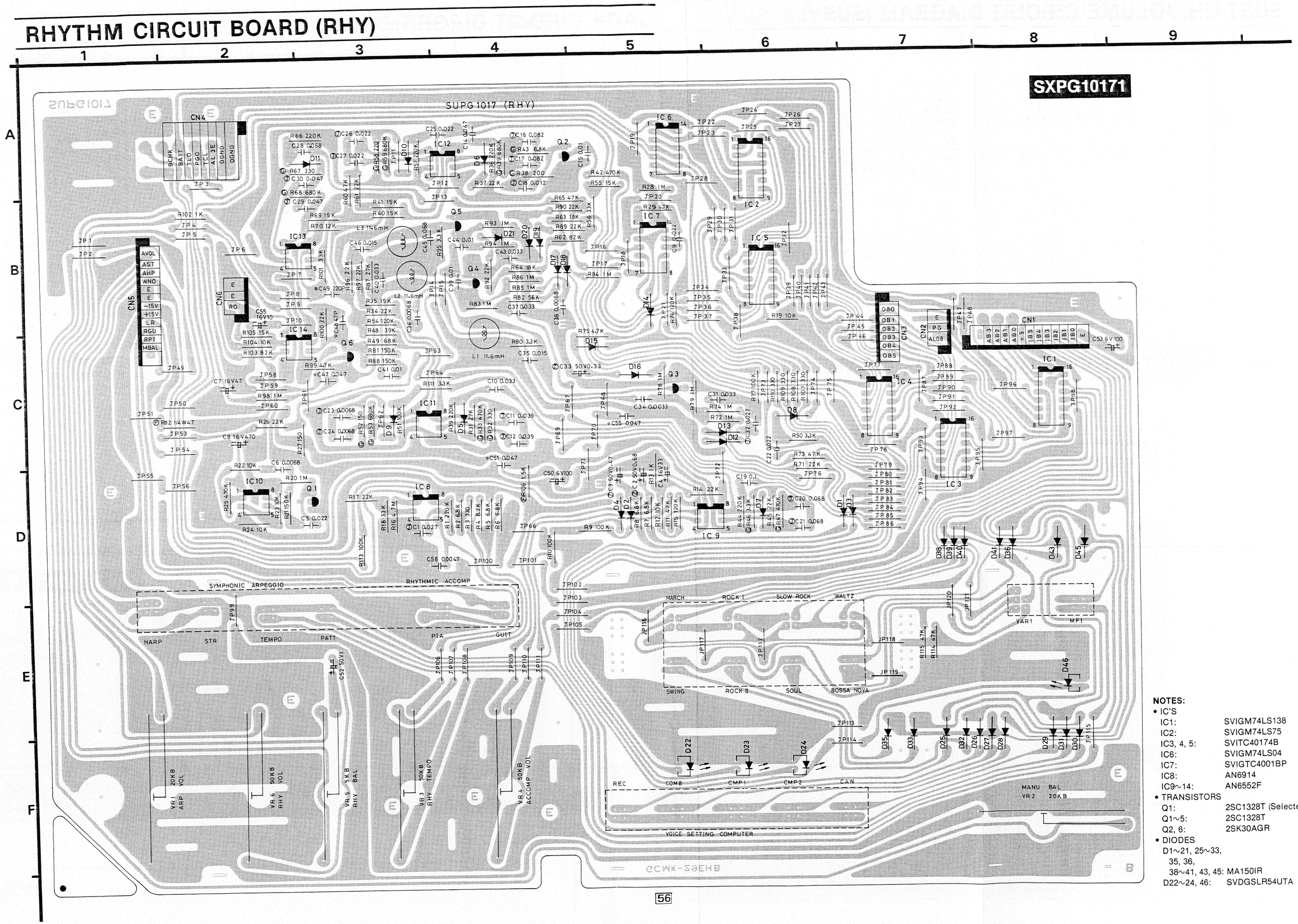

NOTES:

- IC'S

IC1:	SVIGM74LS138
IC2:	SVIGM74LS75
IC3, 4, 5:	SVITC40174B
IC6:	SVIGM74LS04
IC7:	SVIGTC4001BP
IC8:	AN6914
IC9~14:	AN6552F

- TRANSISTORS

Q1:	2SC1328T (Selected)
Q1~5:	2SC1328T
Q2, 6:	2SK30AGR

- DIODES

D1~21, 25~33, 35, 36, 38~41, 43, 45:	MA150IR
D22~24, 46:	SVDGSLR54UTA

SUSTAIN VOLUME CIRCUIT DIAGRAM (SUSV)

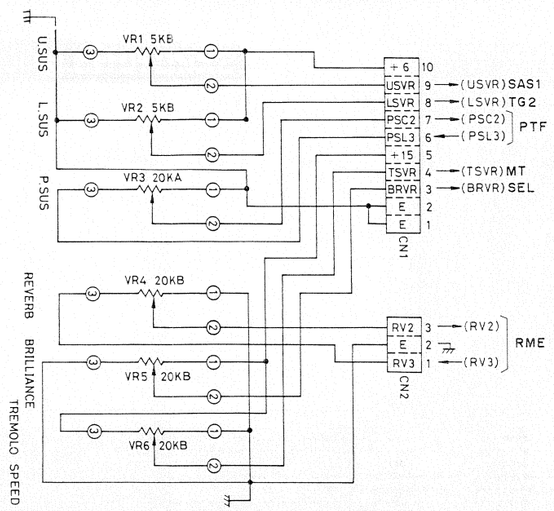

SUSTAIN VOLUME CIRCUIT BOARD (SUSV)

SXPG10181

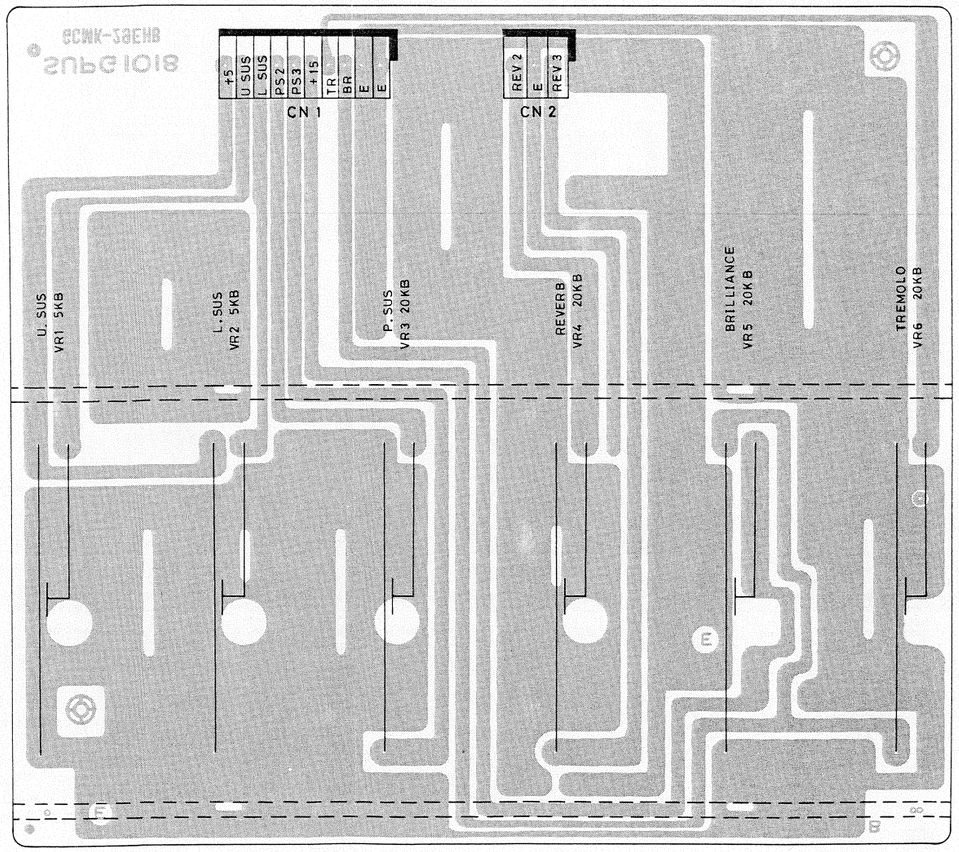

JACK CIRCUIT DIAGRAM (JACK)

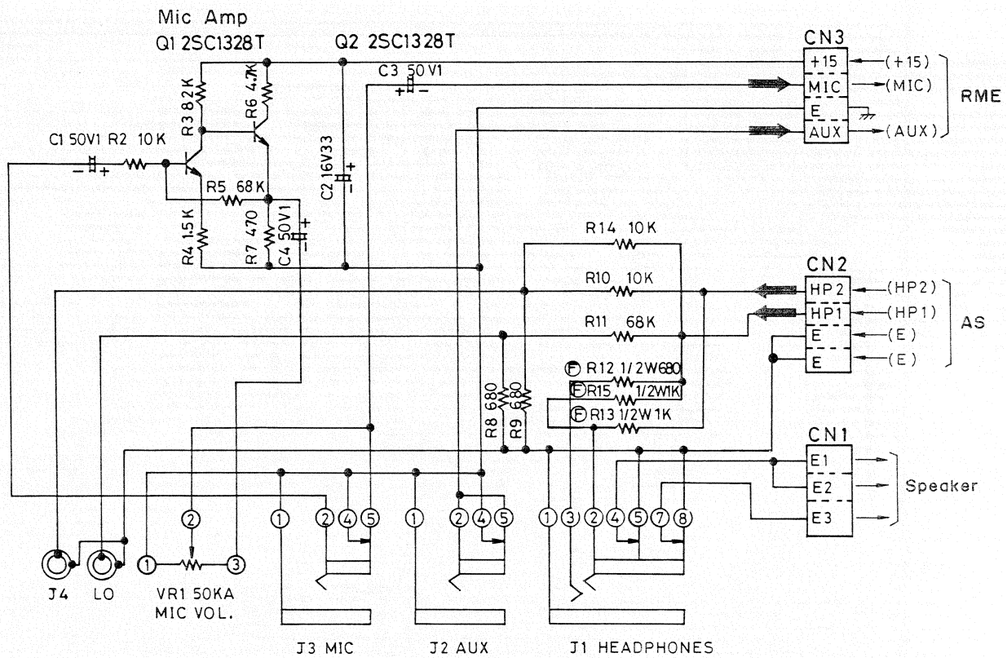

JACK CIRCUIT BOARD (JACK)

SXPG10261

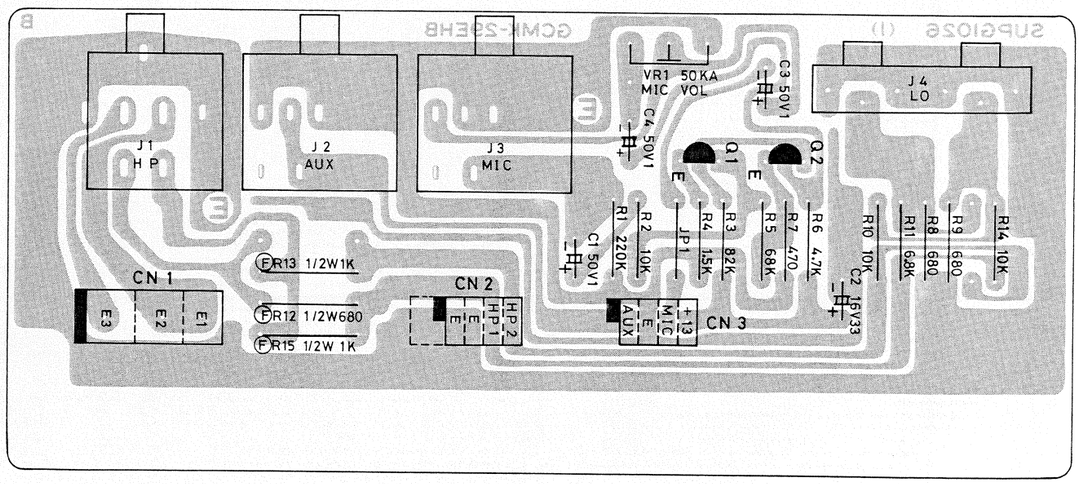

NOTES:
- TRANSISTORS
  Q1, 2: 2SC1328T

MANUAL KEYBOARD CIRCUIT DIAGRAM (MKB)

PEDAL KEYBOARD CIRCUIT DIAGRA

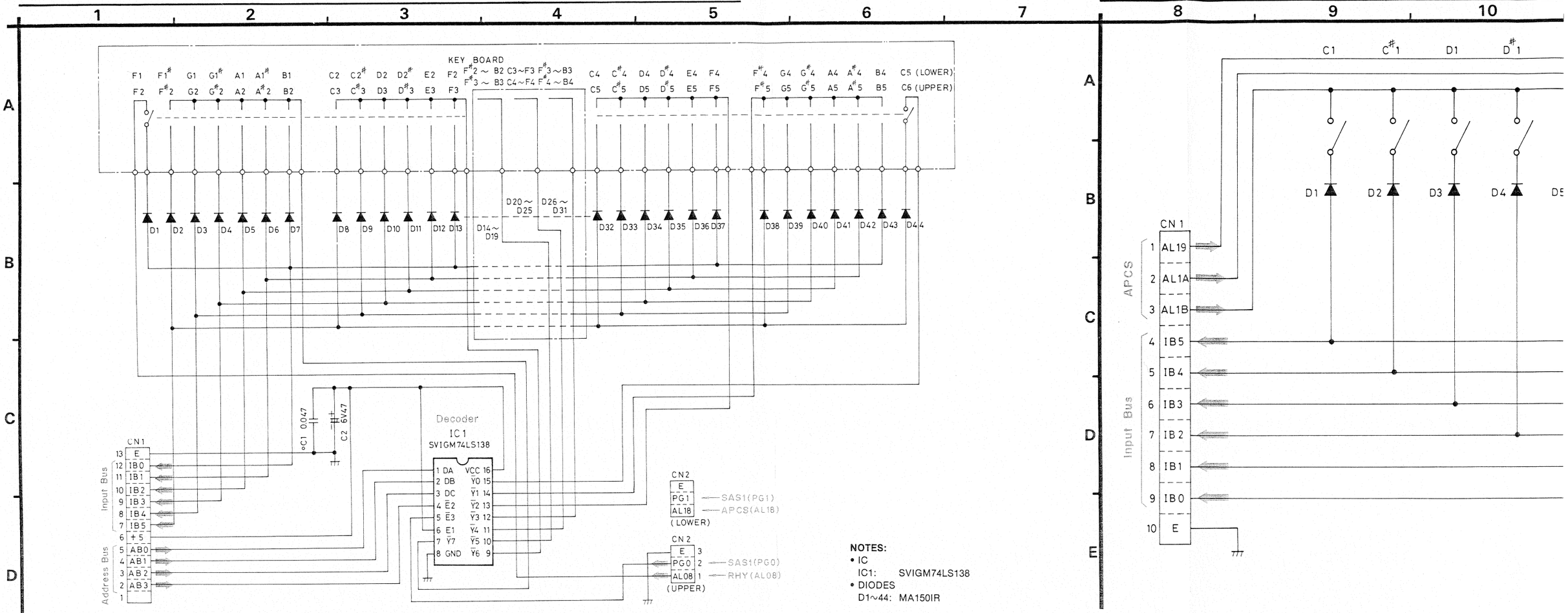

MANUAL KEYBOARD CIRCUIT BOARD (MKB)

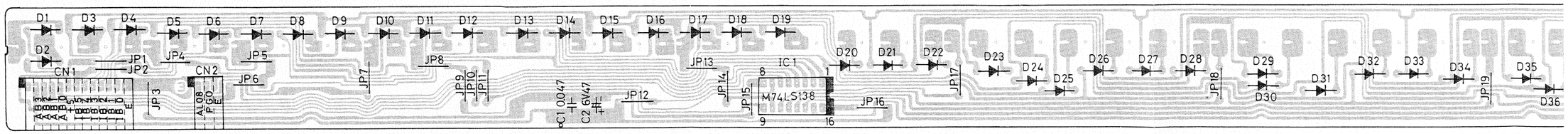

PEDAL KEYBOARD CIRCUIT BOARD (PKB)

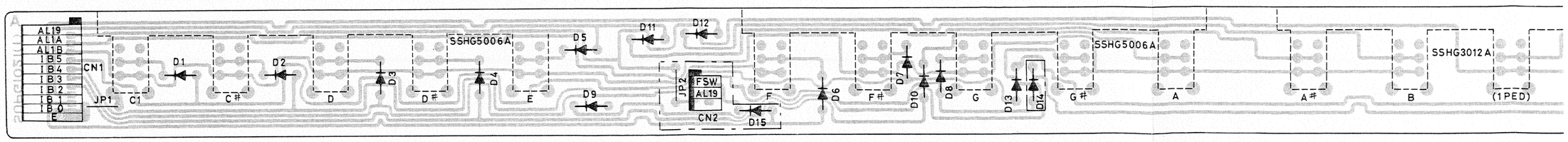

PEDAL KEYBOARD CIRCUIT DIAGRAM (PKB)

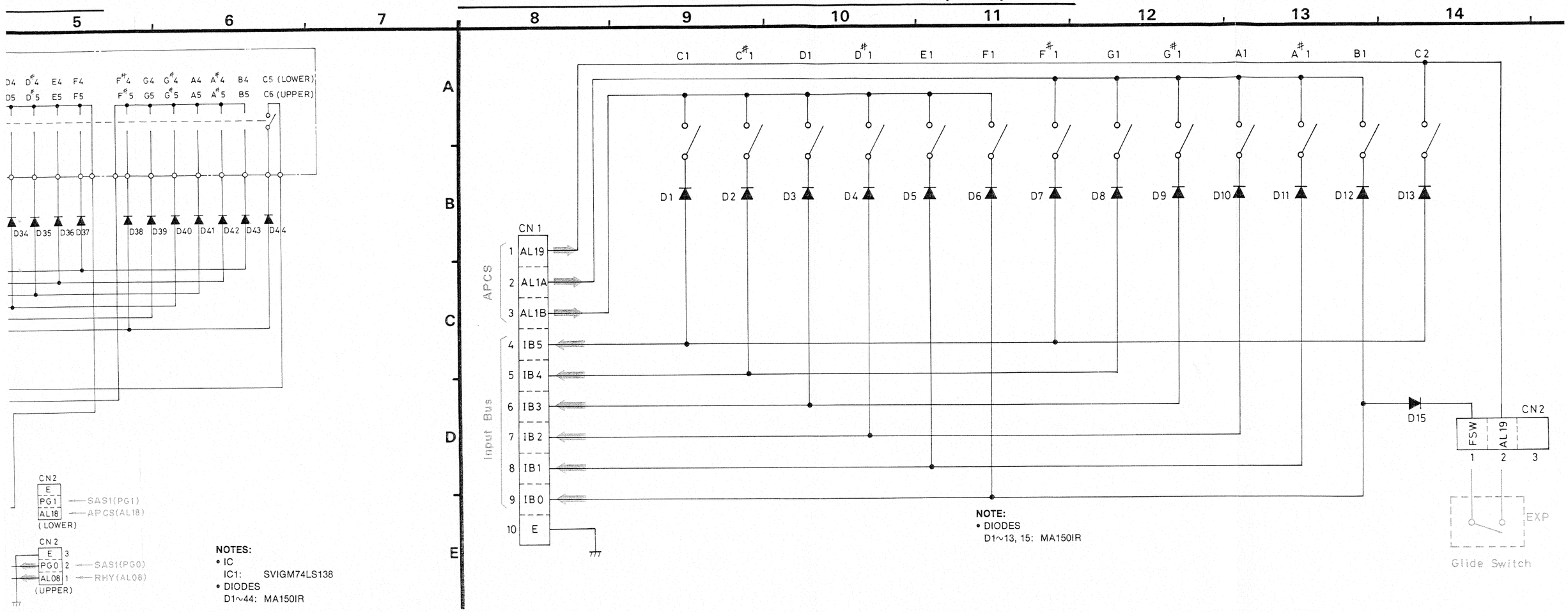

NOTES:
- IC
  IC1: SVIGM74LS138
- DIODES
  D1~44: MA150IR

NOTE:
- DIODES
  D1~13, 15: MA150IR

MKB)

SXPG10201

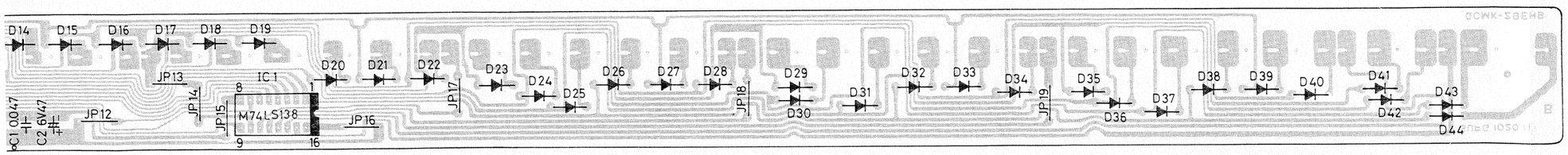

B)

SXPG10211

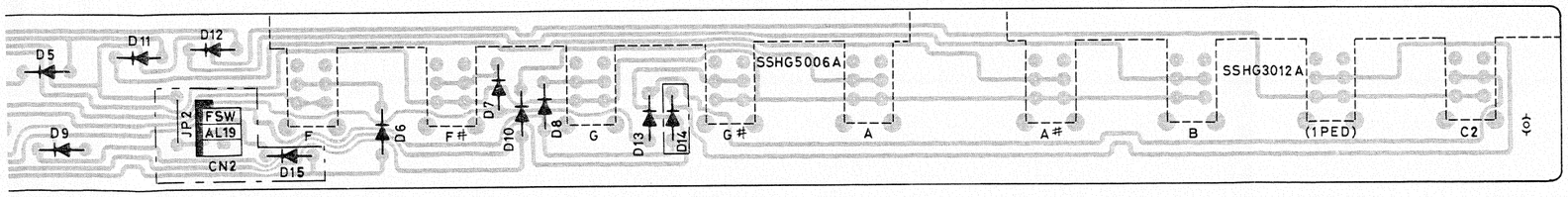

CONTROL PANEL RIGHT CIRCUIT BOARD (CPR)

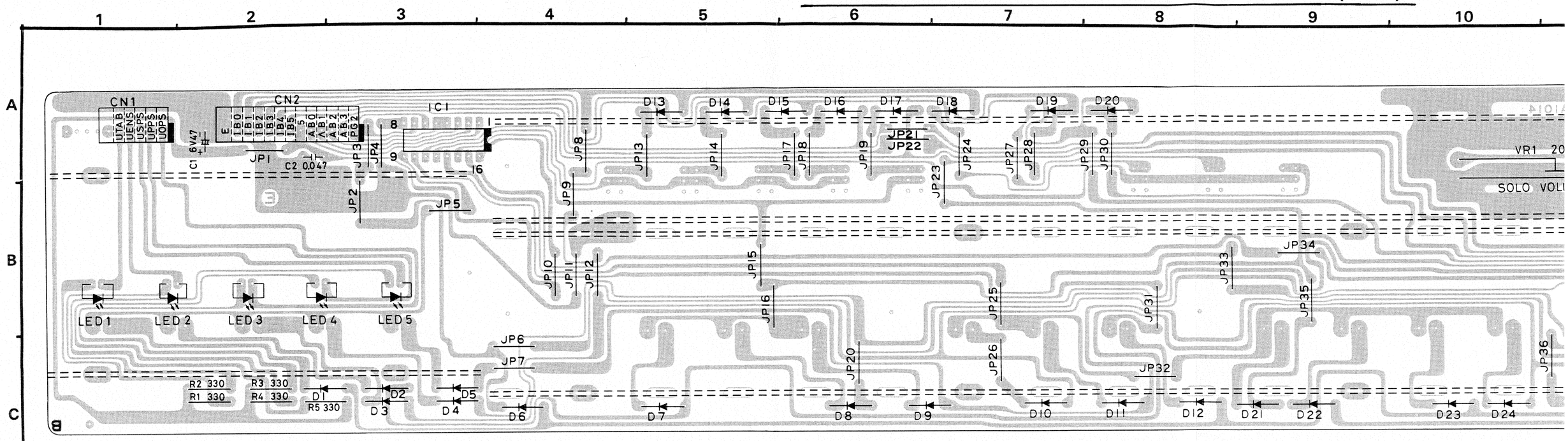

CONTROL PANEL LEFT CIRCUIT BOARD (CPL)

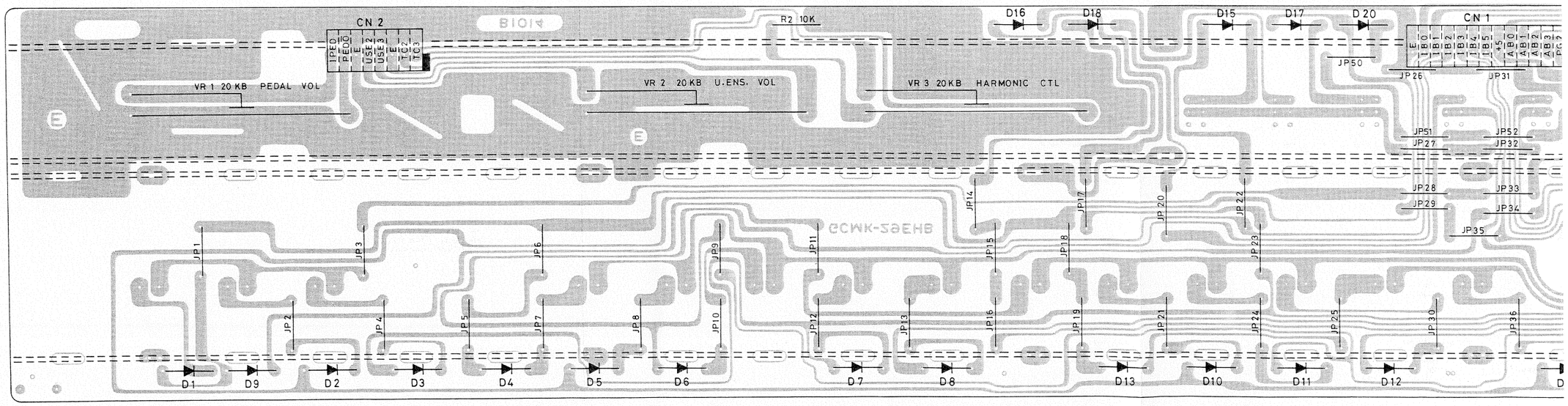

CONTROL PANEL RIGHT CIRCUIT BOARD (CPR)

SXPGA10141

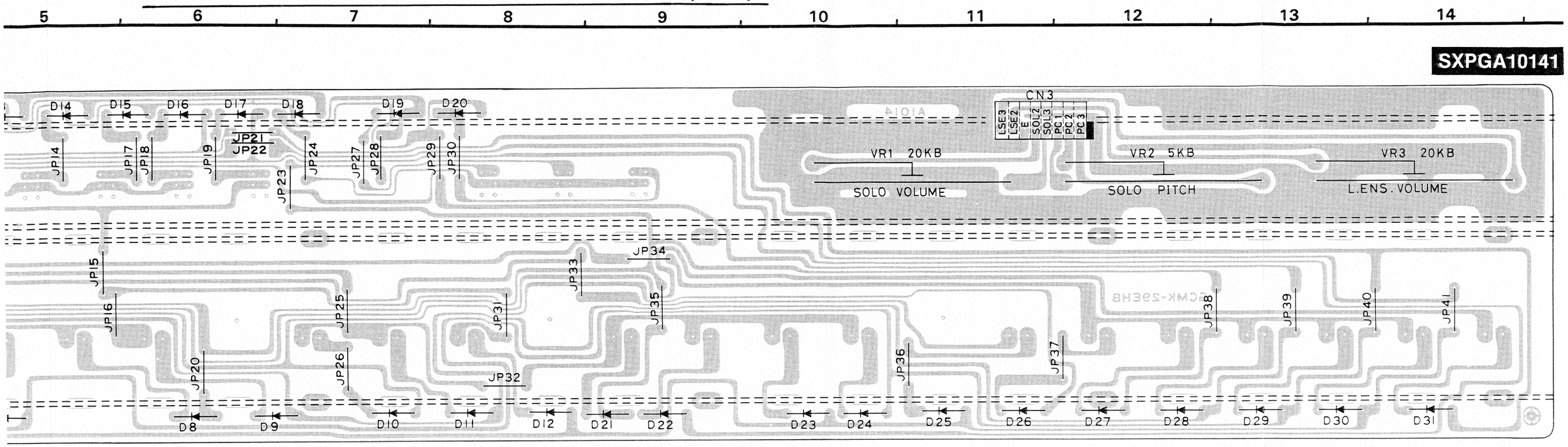

NOTES:

- IC
  IC1: SVIGM74LS138
- DIODES
  D1~31: MA150IR
- LEDS
  LED1~5: SVDGSLR54UTA

CONTROL PANEL LEFT CIRCUIT BOARD (CPL)

SXPGB10141

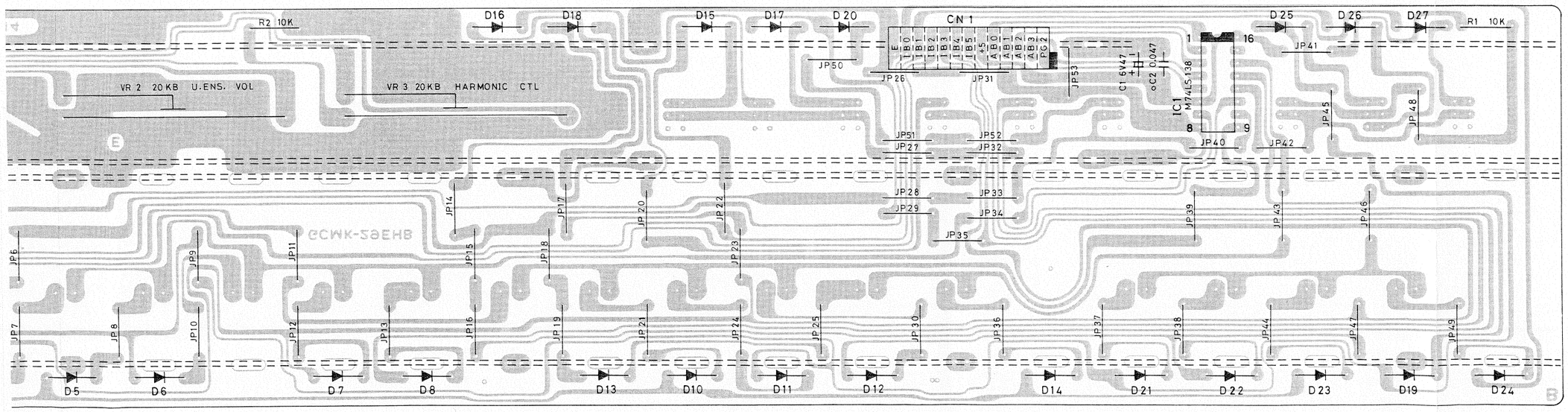

NOTES:

- IC
  IC1: SVIGM74LS138
- DIODES
  D1~27: MA150IR

CONTROL PANEL RIGHT CIRCUIT DIAGRAM (CPR)

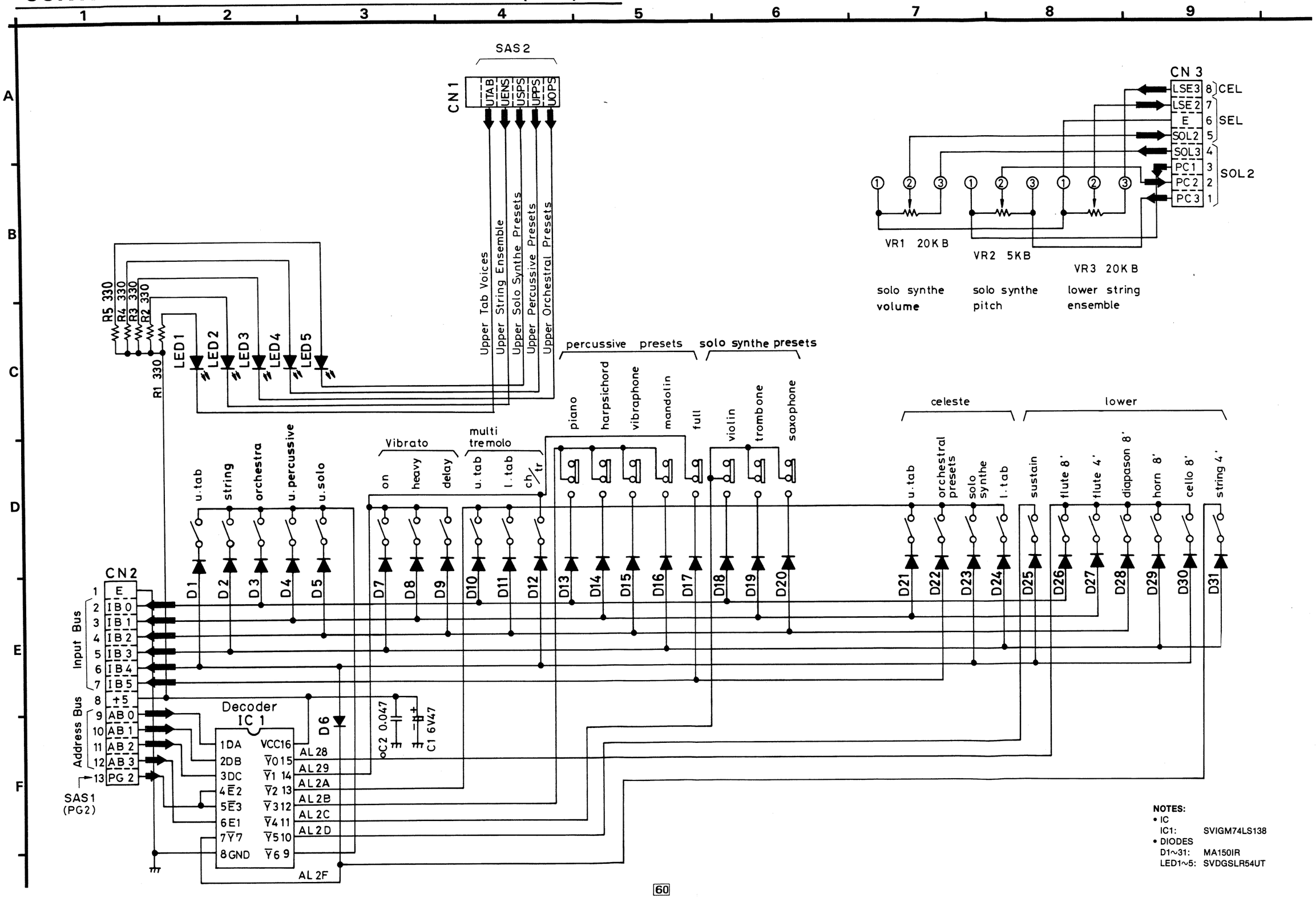

NOTES:

- IC
  IC1: SVIGM74LS138
- DIODES
  D1~31: MA150IR
  LED1~5: SVDGSLR54UT

CONTROL PANEL LEFT CIRCUIT DIAGRAM (CPL)

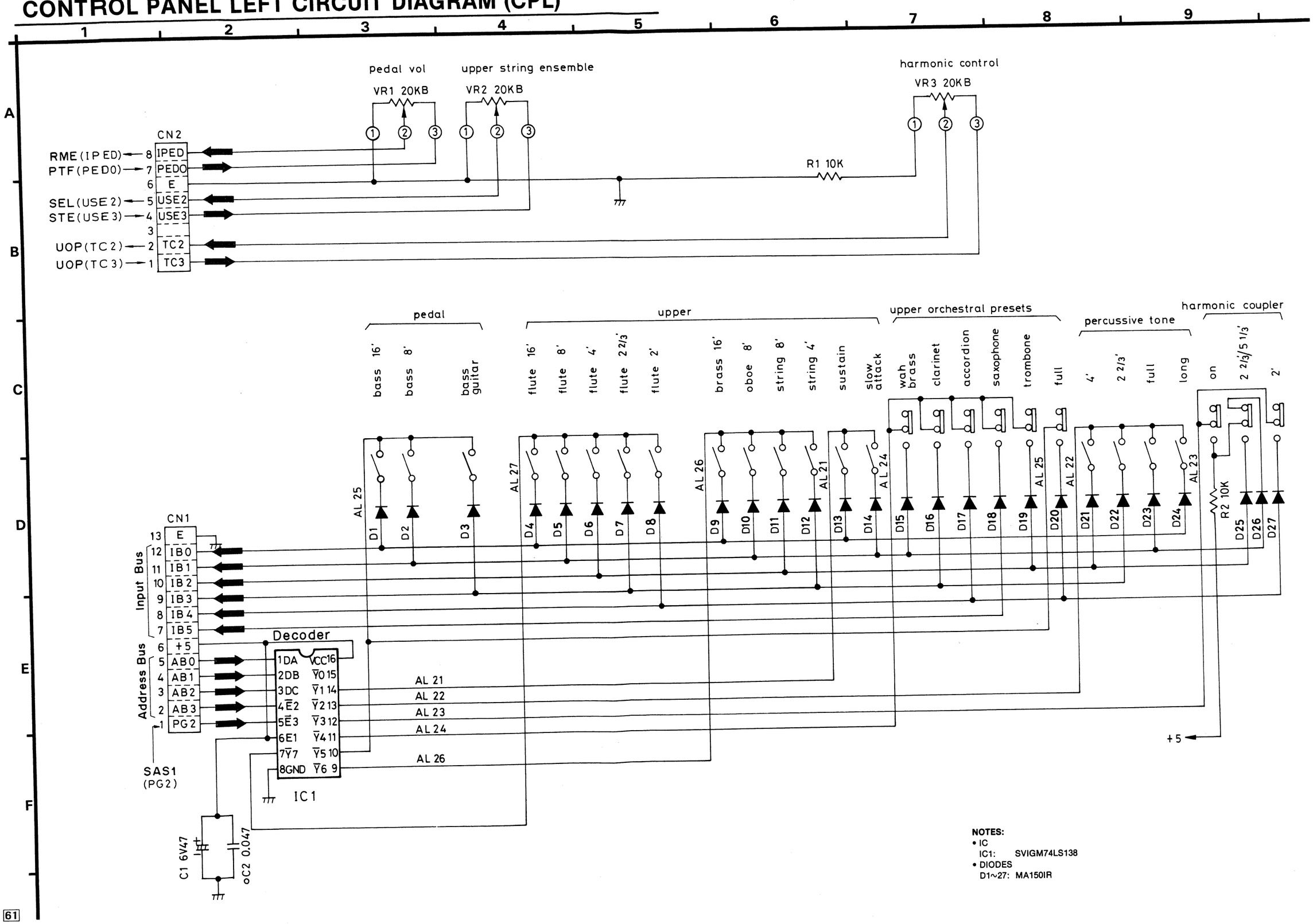

NOTES:
- IC
  IC1: SVIGM74LS138
- DIODES
  D1~27: MA150IR

EXPRESSION CIRCUIT DIAGRAM (EXP)

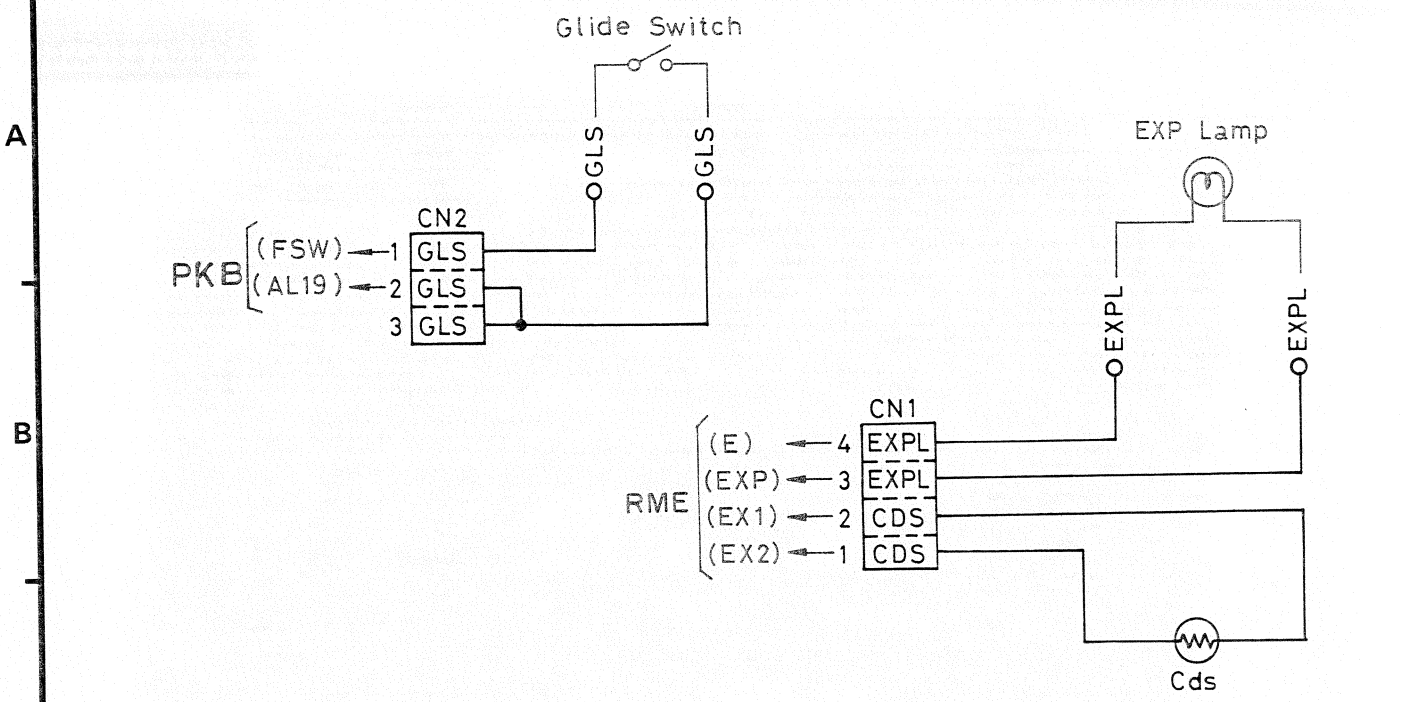

EXPRESSION CIRCUIT BOARD (EXP)

SXPG10322

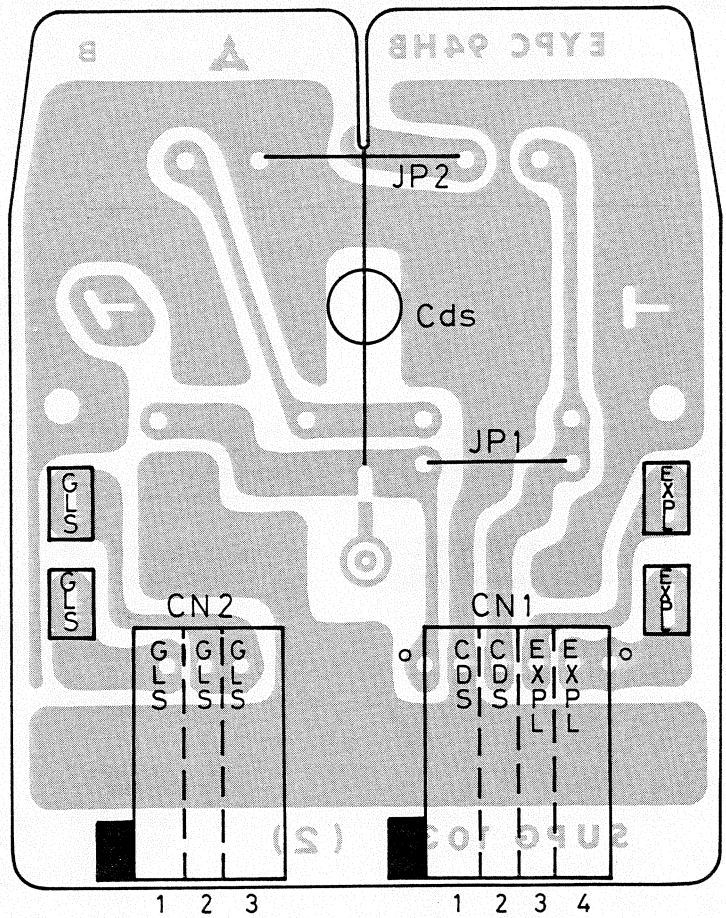

AMP & POWER SUPPLY CIRCUIT BOARD (AS)

SXPG10231

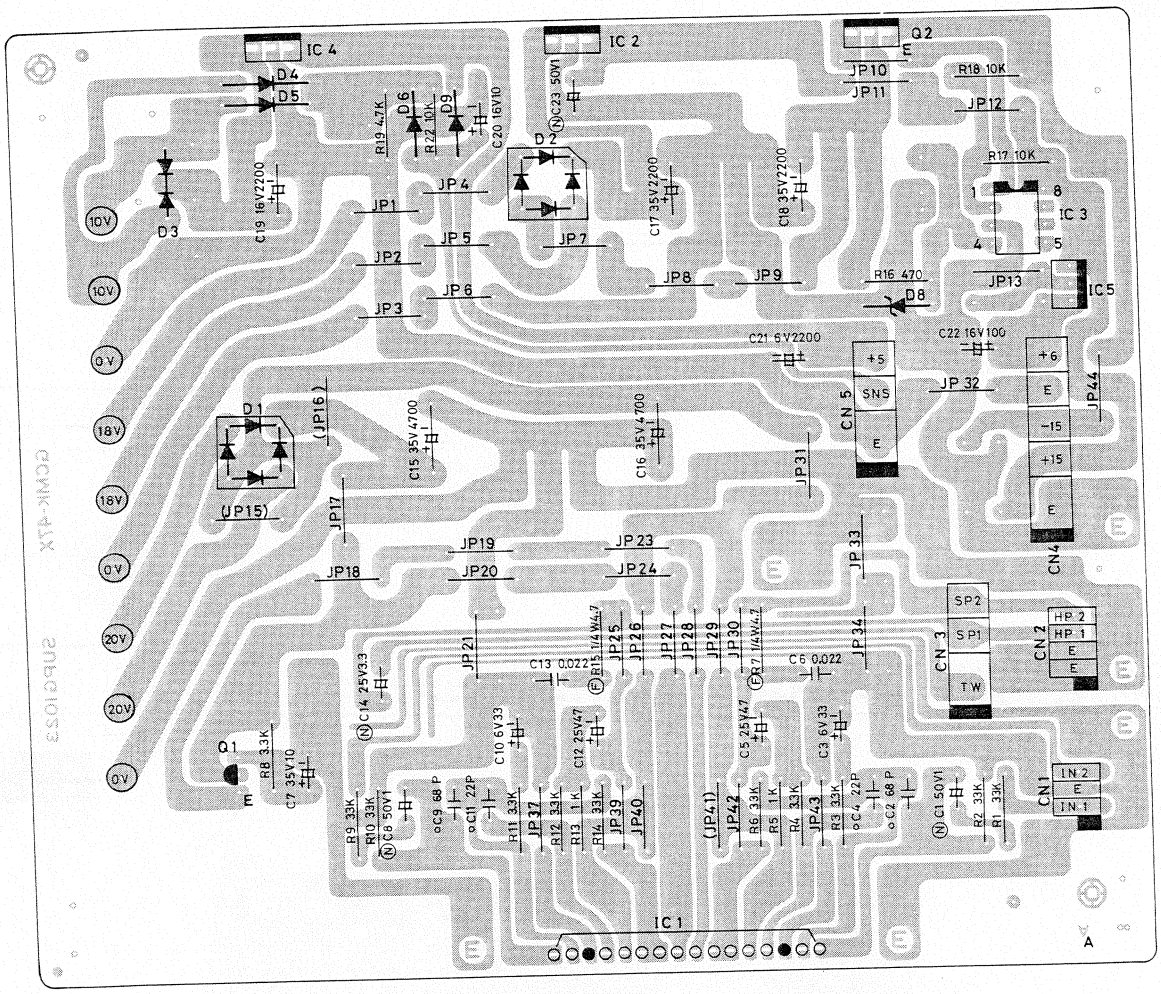

NOTES:

- IC'S

IC1:	SVIGSTK461
IC2:	SVIGUPC7815H
IC3:	AN6552
IC4:	SVIGUPC7805H
IC5:	SVIGHA17806P

- TRANSISTORS

Q1:	2SC828AQRS
Q2:	2SB761P

- DIODES

D1, 2:	SVDS2VB10
D3:	SVDS2VC10
D4, 6, 9:	MA150IR
D8:	SVDO5Z20A

AC POWER CIRCUIT BOARD (ACP)

SXPG10411

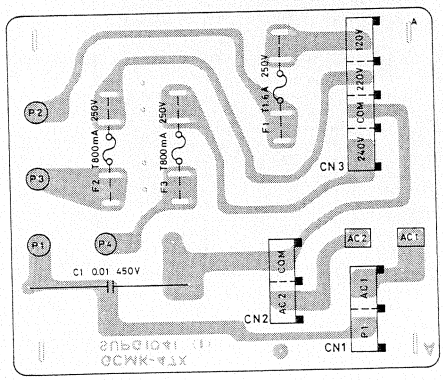

* Product for Canada Only

SXPG10431

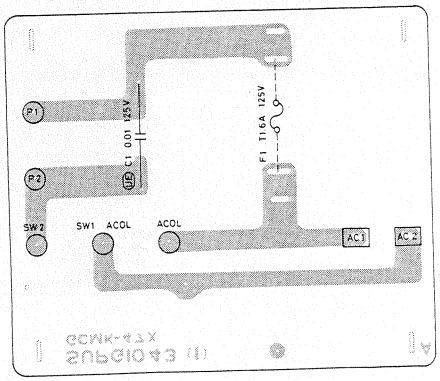

AMP UNIT CIRCUIT DIAGRAM (AS)

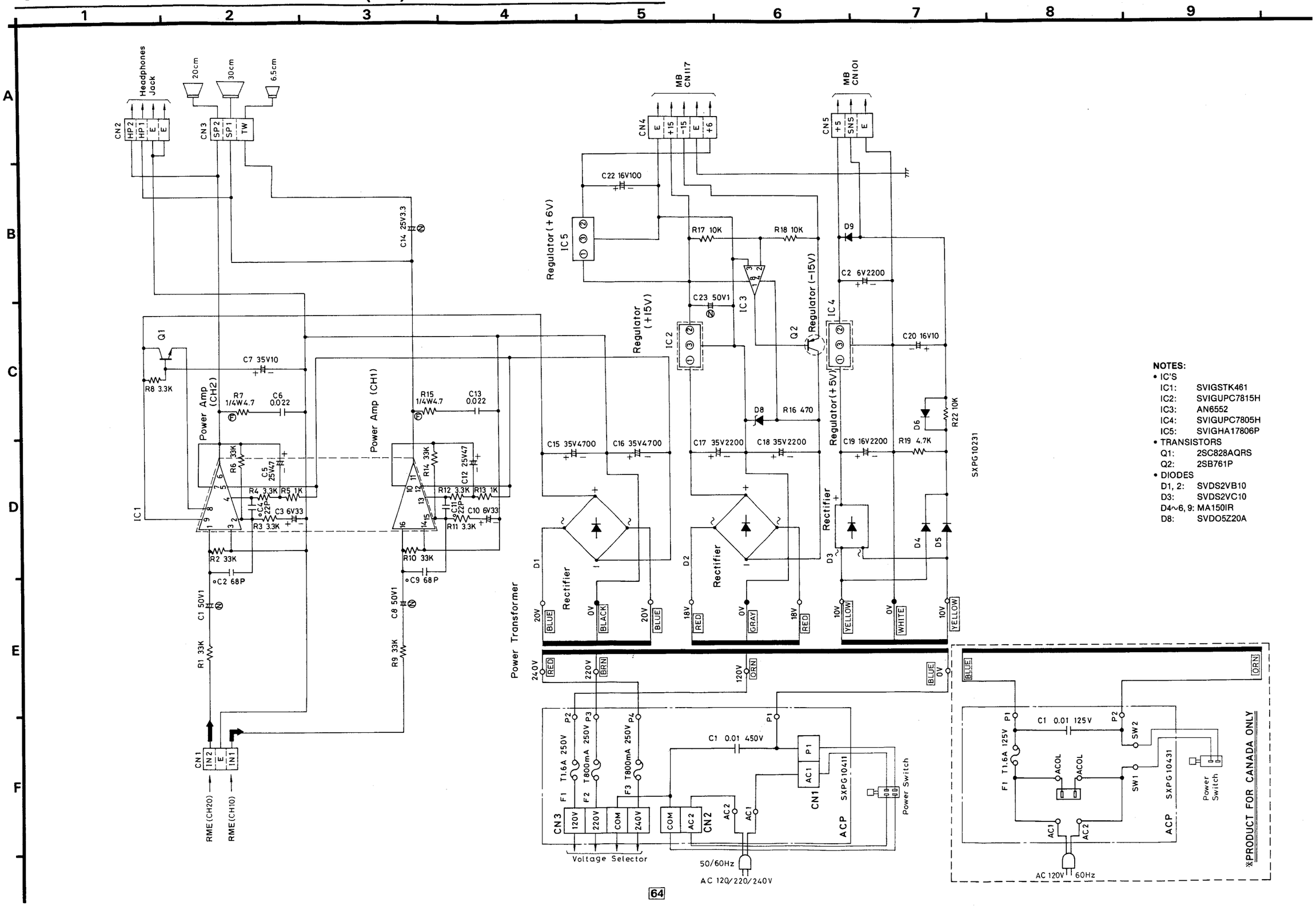

NOTES:

- IC'S
  - IC1: SVIGSTK461
  - IC2: SVIGUPC7815H
  - IC3: AN6552
  - IC4: SVIGUPC7805H
  - IC5: SVIGHA17806P
- TRANSISTORS
  - Q1: 2SC828AQRS
  - Q2: 2SB761P
- DIODES
  - D1, 2: SVDS2VB10
  - D3: SVDS2VC10
  - D4~6, 9: MA150IR
  - D8: SVDO5Z20A

EXPLODED VIEWS OF PEDAL KEYBOARD

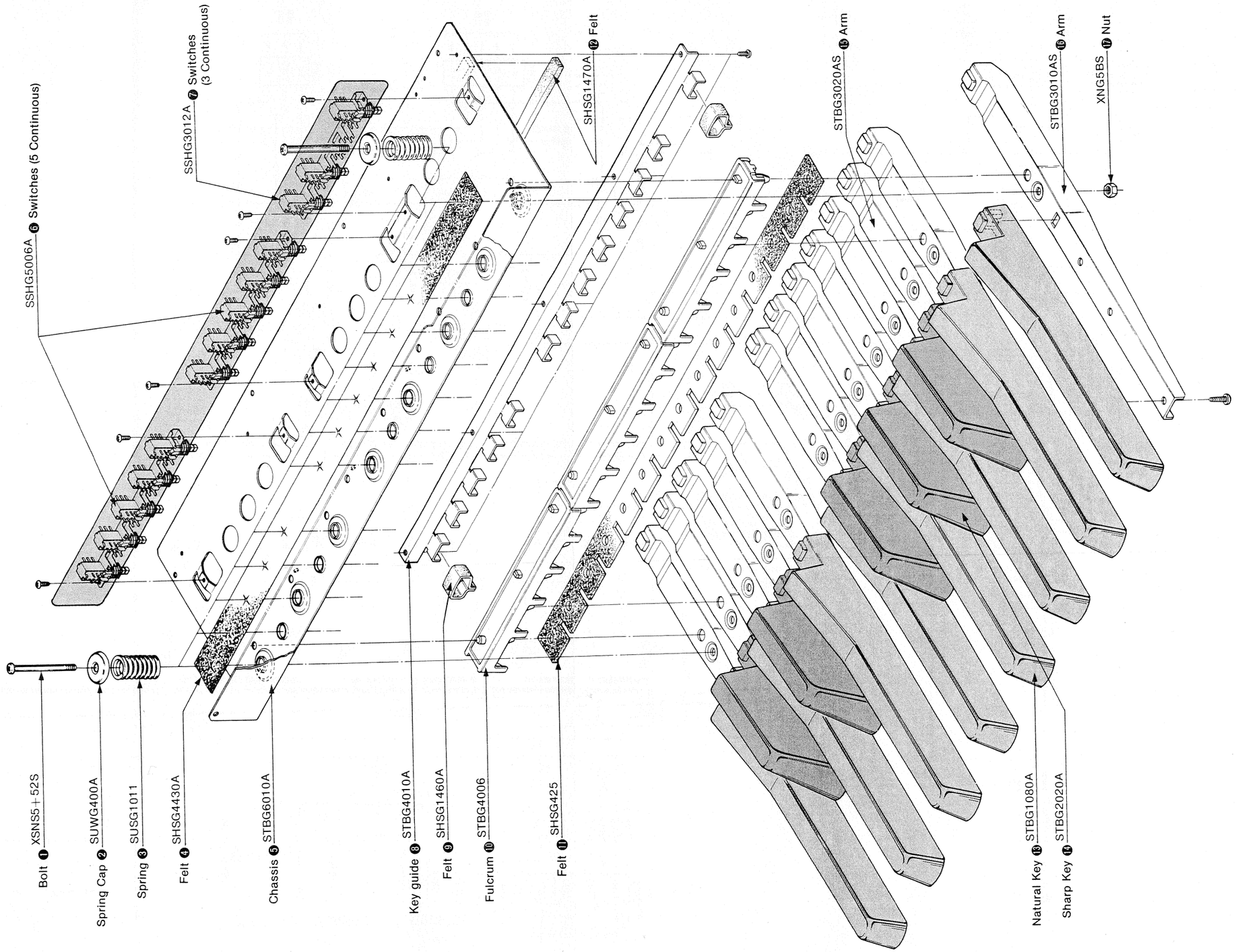

EXPLODED VIEWS OF MANUAL KEYBOARD

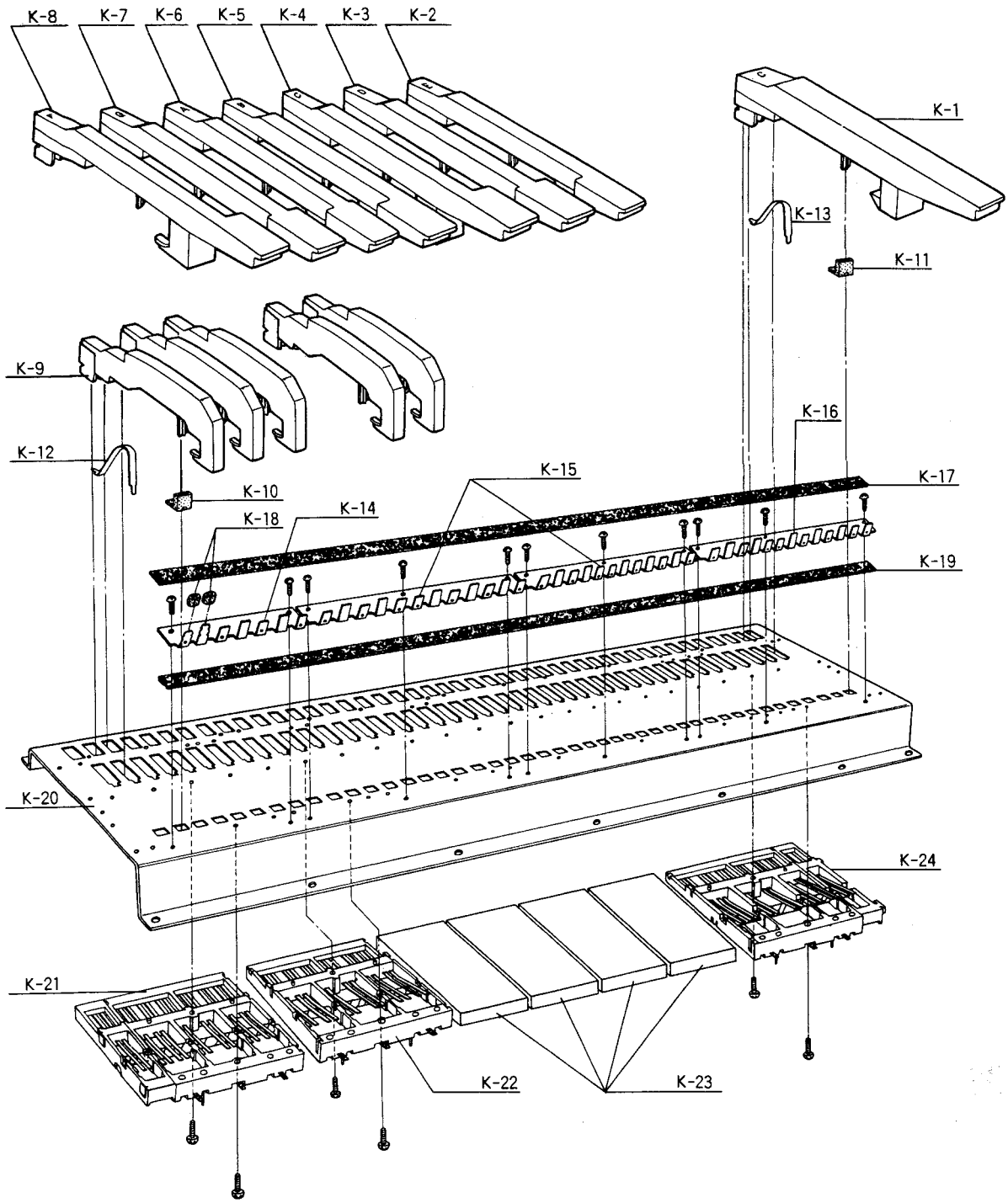

Ref. No.	Part No.	Description	Ref. No.	Part No.	Description
	ESK3219V	Upper Keyboard Assembly	K-14	K30KG74	Key Guide (7 Continuous)
	ESK3220V	Lower Keyboard Assembly	K-15	K30KG73	Key Guide (12 Continuous)
K-1	K30WK61C	Natural Key (Highest C Key)	K-16	K30KG72	Key Guide (13 Continuous)
K-2	K30WK60E	Natural Key (E Key)	K-17	K30DP49B	Felt
K-3	K30WK60D	Natural Key (D Key)	K-18	K30GG1	Key Guide Rubber
K-4	K30WK60C	Natural Key (C Key)	K-19	K30DP77B	Felt
K-5	K30WK60B	Natural Key (B Key)	K-20	K30VCH7	Chassis
K-6	K30WK60A	Natural Key (A Key)	K-21	K30VSU78A	Switch Unit
K-7	K30WK60G	Natural Key (G Key)	K-22	K30VSU79A	Switch Unit
K-8	K30WK60F	Natural Key (F Key)	K-23	K30VSU80A	Switch Unit
K-9	K30BK59	Sharp Key	K-24	K30VSU77A	Switch Unit
K-10, 11	K30AT66	Actuator Rubber			
K-12, 13	K30BN2	Leaf Spring			

REPLACEMENT PARTS LIST

○ New Parts

■ ELECTRICAL PARTS

	Part No.	Description	Remarks
		PRINTED CIRCUIT BOARDS	
○	SXPG10012	System Assigner 1	
○	SXPG10021	System Assigner 2	
○	SXPG10031	Tone Generator 1	
○	SXPG10042	Tone Generator 2	
○	SXPGA10051	Upper Flute Filter	
○	SXPGB10051	Upper Orchestral Filter	
○	SXPGA10061	Lower Tone Filter	
○	SXPGB10061	Selector	
○	SXPGA10071	Upper Orchestral Presets	
○	SXPGB10072	Percussive Presets	
○	SXPGA10082	Solo 1	
○	SXPGB10082	Solo 2	
○	SXPGA10091	Pedal Tone Filter	
○	SXPGB10091	Multi Tremolo	
○	SXPG10103	String Ensemble	
○	SXPG10102	Celeste	
○	SXPG10112	Reverb, Mixing	
○	SXPG10171	Rhythm	
		INTEGRATED CIRCUITS	
	AN6551F	Operational Amplifier	
	AN6552F	Operational Amplifier	
○	AN6914	Dual Comparator	
	MN3004	BBD for Audio Signal Delays (512-stage)	
	MN3006	BBD for Audio Signal Delays (128-stage)	
○	SVIGTC4001BP	Quadruple 2-Input NOR Gate	
○	SVIGTC4013BP	Dual D-Type Flip-Flop	
○	SVIGTC40174B	Hex D-Type Flip-Flop	
○	SVIGTC4049BP	Hex Inverter	
○	SVIGTC4066BP	Analog Switch	
○	SVIGTC4069BP	Hex Inverter	
○	SVIGTC4073BP	Triple 3-Input AND Gate	
○	SVIGTC4081BP	Quadruple 2-Input AND Gate	
○	SVIGM74LS00	Quadruple 2-Input Positive NAND Gate	
○	SVIGM74LS04	Hex Inverter	
○	SVIGM74LS05	Hex Inverter with Open Collector Output	
○	SVIGM74LS08	Quadruple 2-Input Positive AND Gate	
○	SVIGM74LS74	Dual D-Type Flip-Flop	
○	SVIGM74LS75	4-Bit Bistable Latch	
○	SVIGM74LS138	Decoder	
○	SVIGM74LS174	Hex D-Type Flip-Flop	
○	SVIGM74LS293	4-Bit Binary Counter	
○	SVIGM74LS367	Bus Driver	
○	SVIGM53207	Level Shifter	
○	SVIGMC5227	Tone Generator	
○	SVIGD5101LC	1024-Bit Static RAM	
○	SVIGD2316675	16, 384-Bit Mask Programmable ROM	
○	SVIGD8049037	1 Chip 8-Bit Micro Computer	
○	SVIGBA6110	VCA (Voltage Controlled Amplifier)	
○	SVIGMSM4011	Quadruple 2-Input NAND Gate	
	SVIGLA4031P	Reverb Drive Amp	
○	SVIGSTK461	Power IC	
○	SVIGUPC7815H	Voltage Regulator	
○	SVIGUPC7805H	Voltage Regulator	
○	SVIGHA17806P	Voltage Regulator	

	Part No.	Description	Remarks
		TRANSISTORS	
	Standard Part	Production Part	
	2SA798A-G2	2SA798AFG2	
	2SA1015-Y	2SA1015GR	
	2SB761-R	2SB761P	
	2SC1328-T	2SC828AQRS, 2SC828T	
	2SC1047-C	2SC1047C	
	2SC1684-R	2SC1684RS	
	2SC2377-C	2SC2377C	
	2SK30AD	2SK117BL, 2SK30AGR	
		DIODES	
	MA162A	MA150IR Switching	
	SVDG1SS53	Envelope	
	SVDS2VB10	Rectifier	
	SVDS2VC10	Rectifier	
	SM112	SVDG10E1LF	
	SVD05Z20A	Zener	
		COILS, CRYSTAL	
○	EIS10E301Z	Coil for Oscillator	
	RLQZ1231-Z	Rythm Coil	
○	SVQG43U1598T	Crystal	
		LED'S, LAMP	
	LN29RP	LED (Power Indicator)	
○	SVDGSLR54UTA	LED	
	XAMR55P	Expression Lamp	
		CDS	
○	SVEG5	Light Sensitive Device	
		THERMISTOR	
○	ERTD2FHL333S	Thermistor	
		SWITCHES	
○	ESB70291S	Power Switch	
○	ESB70454T	Power Switch (Product for Canada Only)	
○	ESE3758	Voltage Selector	
○	ESB8963	Orchestral Conductor Switch Assembly	
○	[B89VSU104]	Switch	
○	EST236	Tang Switch Assembly	
○	EST235	Tang Switch Assembly	
○	[T23VSU3]	Switch	
○	SSHG8006AA	Percussive Presets, Solo Synthesizer Presets	
○	SSHG9009AA	Upper Orchestral Presets, Harmonic Coupler	

	Part No.	Description	Remarks
O	SSHG6005AA	Symphonic Arpeggio, Rythmic Accompaniment	
O	SSHG2010AA	Rythm A/B, Fill-in & Intro	
O	SSHG5007AA	Voice Setting Computer	
O	SSHG8005AA	Rythm Selector	
O	SSHG7009AA	Auto Play Chord, Techni-Chord	
O	SSHG4004AA	Program Chord, Walking Bass	
O	SSHG1017AA	Synchro Start	
O	SSHG1018A	Touch Start	
	SSHG14	Glide Switch	
O	K30VSU78A	Manual Key Switch Unit Upper F2~B2 / Lower F1~B1	
O	K30VSU79A	Manual Key Switch Unit Upper C3~F3 / Lower C2~F2	
O	K30VSU80A	Manual Key Switch Unit Upper F#3~F5 / Lower F#2~F4	
O	K30VSU77A	Manual Key Switch Unit Upper F#5~C6 / Lower F#4~C5	
O	SSHG5006A	Pedal Switches (5 continuous)	
O	SSHG3012A	Pedal Switches (3 continuous)	
	VARIABLE RESISTORS		
O	EVA1020A24G	20KΩA, Main Volume	
O	EVHEVA529A54	50KΩA, Microphone Volume	
O	EVD725B53G	5KΩB, Rhythm Balance, Lower Sustain, Upper Sustain, Solo Pitch Control	
O	EVD1125A24G	20KΩA, Pedal Sustain	
O	EVD825B24G	20KΩB, Reverb, Brilliance, Tremolo Speed, Pedal Volume, Harmonic Control, Upper String Ensemble Volume, Solo Synthesizer Presets Volume, Lower String Ensemble Volume, Arpeggio Volume, Manual Balance	
O	EVD925B54G	50KΩB, Rhythm Volume Rhythm Tempo, Accompaniment Volume	
	SEMI-FIXED RESISTORS		
O	EVNG0T01B13A	1KΩ	
O	EVBG0T01B14A	10KΩ	
O	EVNG0T01B24A	20KΩ	
O	EVNG0T01B54A	50KΩ	
O	EVNG0T01B15A	100KΩ	
	BLOCK RESISTORS		
O	EXBP88102M	1KΩ	
O	EXBP88152M	1.5KΩ	
O	EXBP88472M	4.7KΩ	
O	EXBP88684K	680KΩ	
O	EXBP84475K	4.7 MΩ	
	ELECTROLYTIC CAPACITORS		
	ECET35R472SW	4700μF, 35V	
O	ECNC4A103M	0.01μF, 450V	
	ECQU1A103ME	0.01μF, 125V (Product for Canada Only)	

	Part No.	Description	Remarks
	JACKS		
	SJJG20A	Mic Jack, Aux Jack	
O	SJJG70A	Headphones Jack	
	SJFG10A	Line Out Terminals	
	SPEAKERS		
O	EAS30PL79S	30cm Speaker	
O	EAS20PL163S	20cm Speaker	
O	EAS65PH05ST	6.5cm Speaker	
	FUSES		
	XBA2C16TR0	250V, 1.6A (Time Lag)	
	XBA2C08TR0	250V, 0.8A (Time Lag)	
	XBA1E16NS5	125V, 1.6A (Product for Canada Only)	
	POWER TRANSFORMERS		
O	SLTG5Q11		
O	SLTG5Q12	(Product for Canada Only)	
	AC CORDS, AC OUTLET, PLUG		
	RJA23ZC-K	AC Cord	
	SJAG23	AC Cord (Product for Australia Only)	
	RJA45ZC-K	AC Cord (Product for England and Malaysia Only)	
	SJAG22	AC Cord (Product for Canada Only)	
O	SJSA66-2	AC Outlet (Product for Canada Only)	
O	SJP5213-1	Plug for AC Cord (Product for Asia Only)	
	ASSEMBLY PARTS		
O	SXVG5020A	EXP Unit	
O	SJUG20801N	Reverb Unit	
	SHRG550	Cussion for Reverb	

■ MECHANICAL PARTS

	Part No.	Description	Remarks
		CABINET	
O	SKZG1100A	Sliding Cover	
O	SKZG1100B	Sliding Cover (Product for Canada Only)	
O	SGXG410A	Ornament for Sliding Cover	
O	SKPG110A	Top Cover	
O	SKPG110B	Top Cover (Product for Canada Only)	
O	SKGG1D60B	Music Rack	
O	SKGG1E10B	Music Rack (Product for Canada Only)	
O	SBHG5003	Hinge for Music Rack	
	SBLG7	Stay for Music Rack	
O	SKFG2201A	Rear Panel	
	SKHG5	Handle for Rear Panel	
O	SGWG5061A	Upper Right End Cover Panel	
O	SGWG5061C	Upper Right End Cover Panel (Product for Canada Only)	
O	SYWG4101A	Upper Left End Cover Panel (with LED)	
O	SYWG4101B	Upper Left End Cover Panel (Product for Canada Only)	
O	SGWG3070A	Lower Right End Cover Panel	
O	SGWG3070B	Lower Right End Cover Panel (Product for Canada Only)	
O	SGWG2100A	Lower Left End Cover Panel	
O	SGWG2100B	Lower Left End Cover Panel (Product for Canada Only)	
O	SGWG1170A	Control Panel	
O	SGWG1170B	Control Panel (Product for Canada Only)	
O	SGXG430BS	Ornament Panel for Lower Keyboard	
O	SHRG2020A	Foot for Cabinet	
		KNOBS	
	SBNG4010A	Mic Volume Knob	
	SBNG11K	Main Volume Knob	
	SBNG6010G	Slide Volume Knob	
		BUTTONS	
O	SBCG20147	Power Switch	
O	SBCG431	Touch Switch (with LED)	
O	B63BT16GA	Yellow (harp)	Symphonic Arpeggio
O	B63BT16GB	Yellow (strings)	Symphonic Arpeggio
O	B63BT16GC	Yellow (fast)	Symphonic Arpeggio
O	B63BT16GD	Yellow (I/II)	Symphonic Arpeggio
O	B63BT16GE	Yellow (piano)	Rythmic Accompaniment
O	B63BT16GF	Yellow (guitar)	Rythmic Accompaniment
O	B63BT16AB	Beige (march)	Rythm Selector
O	B63BT16EA	Gray (rock I)	Rythm Selector
O	B63BT16AC	Beige (slow rock)	Rythm Selector
O	B63BT16EB	Gray (waltz)	Rythm Selector
O	B63BT16EC	Gray (swing)	Rythm Selector
O	B63BT16AD	Beige (rock II)	Rythm Selector
O	B63BT16ED	Gray (soul)	Rythm Selector
O	B63BT16AE	Beige (bossa nova)	Rythm Selector

	Part No.	Description	Remarks
O	B63BT16CA	Violet Blue (cancel)	Auto Play Chord
O	B63BT16BA	Sky Blue (record)	Auto Play Chord
O	B63BT16BB	Sky Blue (recall)	Auto Play Chord
O	B63BT16BC	Sky Blue (one finger)	Auto Play Chord
O	B63BT16BD	Sky Blue (fingered)	Auto Play Chord
O	B63BT16AA	Beige (memory)	Auto Play Chord
O	B63BT16BE	Sky Blue (program I)	Program Chord
O	B63BT16BF	Sky Blue (program II)	Program Chord
O	B63BT16BG	Sky Blue (reset)	Program Chord
O	B63BT16H	Grass Green	(Without Silk Print)
O	B63BT16J	Soft Green	(Without Silk Print)
O	B63BT16C	Violet Blue	(Without Silk Print)
O	B63BT16B	Sky Blue	(Without Silk Print)
O	B63BT16A	Beige	(Without Silk Print)
O	B63BT15DA	Orange (wah brass)	Upper Orchestral Presets
O	B63BT15DB	Orange (clarinet)	Upper Orchestral Presets
O	B63BT15DC	Orange (accordion)	Upper Orchestral Presets
O	B63BT15DD	Orange (saxophone)	Upper Orchestral Presets
O	B63BT15DE	Orange (trombone)	Upper Orchestral Presets
O	B63BT15EA	Orange (full)	Upper Orchestral Presets
O	B63BT15CA	Violet Blue (on)	Harmonic Coupler
O	B63BT15CB	Violet Blue ($2^2/_3$'/$5^1/_3$')	Harmonic Coupler
O	B63BT15CC	Violet Blue (2')	Harmonic Coupler
O	B63BT15GB	Yellow (piano)	Percussive Presets
O	B63BT15GC	Yellow (harpsichord)	Percussive Presets
O	B63BT15GD	Yellow (vibraphone)	Percussive Presets
O	B63BT15GE	Yellow (mandolin)	Percussive Presets
O	B63BT15EA	Gray (full)	Percussive Presets
O	B63BT15FA	Red (violin)	Solo Synthesizer Presets
O	B63BT15FB	Red (trombone)	Solo Synthesizer Presets
O	B63BT15FC	Red (saxophone)	Solo Synthesizer Presets
O	B89VBT103A	Orchestral Conductor (with LED)	
		SWITCH LEVERS	
O	T23VLV2CA	bass 16'	Pedal Tone Lever
O	T23VLV2CB	bass 8'	Pedal Tone Lever
O	T23VLV2AA	bass guitar	Pedal Tone Lever
O	T23VLV2CC	flute 16'	Upper Tone Lever
O	T23VLV2CD	flute 8'	Upper Tone Lever
O	T23VLV2CE	flute 4'	Upper Tone Lever
O	T23VLV2CF	flute $2^2/_3$'	Upper Tone Lever
O	T23VLV2CG	flute 2'	Upper Tone Lever
O	T23VLV2EB	brass 16'	Upper Tone Lever
O	T23VLV2EC	oboe 8'	Upper Tone Lever
O	T23VLV2AB	string 8'	Upper Tone Lever
O	T23VLV2AC	string 4'	Upper Tone Lever
O	T23VLV2DA	sustain	Upper Tone Lever
O	T23VLV2DB	slow attack	Upper Tone Lever

	Part No.	Description	Remarks
O	T23VLV2CJ	4′ (Upper Percussive tone Lever)	
O	T23VLV2CK	2²/₃′ (Upper Percussive tone Lever)	
O	T23VLV2DC	full (Upper Percussive tone Lever)	
O	T23VLV2DD	long (Upper Percussive tone Lever)	
O	T23VLV2BA	on (Vibrato Lever)	
O	T23VLV2BB	heavy (Vibrato Lever)	
O	T23VLV2DE	delay (Vibrato Lever)	
O	T23VLV2CL	tab voices (Multi Tremolo Lever)	
O	T23VLV2FA	chorus/tremolo (Multi Tremolo Lever)	
O	T23VLV2CL	tab voices (Celeste Lever)	
O	T23VLV2BC	orchestral presets (Celeste Lever)	
O	T23VLV2ED	solo synthe presets (Celeste Lever)	
O	T23VLV2DA	sustain (Lower Tone Lever)	
O	T23VLV2CD	flute 8′ (Lower Tone Lever)	
O	T23VLV2CE	flute 4′ (Lower Tone Lever)	
O	T23VLV2CM	diapason 8′ (Lower Tone Lever)	
O	T23VLV2EE	horn 8′ (Lower Tone Lever)	
O	T23VLV2AD	cello 8′ (Lower Tone Lever)	
O	T23VLV2AE	string ensemble (Lower Tone Lever)	
		MANUAL KEYS	
	K30WK60A	Natural Key (A Key)	
	K30WK60B	Natural Key (B Key)	
	K30WK60C	Natural Key (C Key)	
	K30WK60D	Natural Key (D Key)	
	K30WK60E	Natural Key (E Key)	
	K30WK60F	Natural Key (F Key)	
	K30WK60G	Natural Key (G Key)	
	K30WK61C	Natural Key (Highest Octave C Key)	
	K30BK59	Sharp Key	
		PEDAL KEYS	
	STBG1080A	Natural Key	
	STBG2020A	Sharp Key	
		BENCH	
O	SZ-U1		
O	SZ-U1NR	(Product for Canada Only)	
O	SZ-U1R	(Product for Austraia Only)	
		INSTRUCTION BOOK	
O	SQFG2710	Instruction Book (Scandinavian)	
O	SQFG2720	Instruction Book (English)	
O	SQFG2730	Instruction Book (French)	
O	SQFG2740	Instruction Book (German)	

■ WIRING PARTS LIST (See wiring diagram on page 16.)

	Part No.	Description	Remarks
O	SWKG136	Conector, With Wire	
O	SWKG140	Conector, With Wire	
O	SWKG141	Conector, With Wire	
O	SWKG143	Conector, With Wire	
O	SWKG144	Conector, With Wire	
O	SWKG145	Conector, With Wire	
O	SWKG146	Conector, With Wire	
O	SWKG148	Conector, With Wire	
O	SWKG150	Conector, With Wire	
O	SWKG151	Conector, With Wire	
O	SWKG152	Conector, With Wire	
O	SWKG154	Conector, With Wire	
O	SWKG155	Conector, With Wire	
O	SWKG159	Conector, With Wire	
O	SWKG163	Conector, With Wire	
O	SWKG164	Conector, With Wire	
O	SWKG165	Conector, With Wire	
O	SWKG166	Conector, With Wire	
O	SWKG167	Conector, With Wire	
O	SWKG168	Conector, With Wire	
O	SWKG171	Conector, With Wire	
O	SWKG172	Conector, With Wire	
O	SWKG173	Conector, With Wire	