KORG

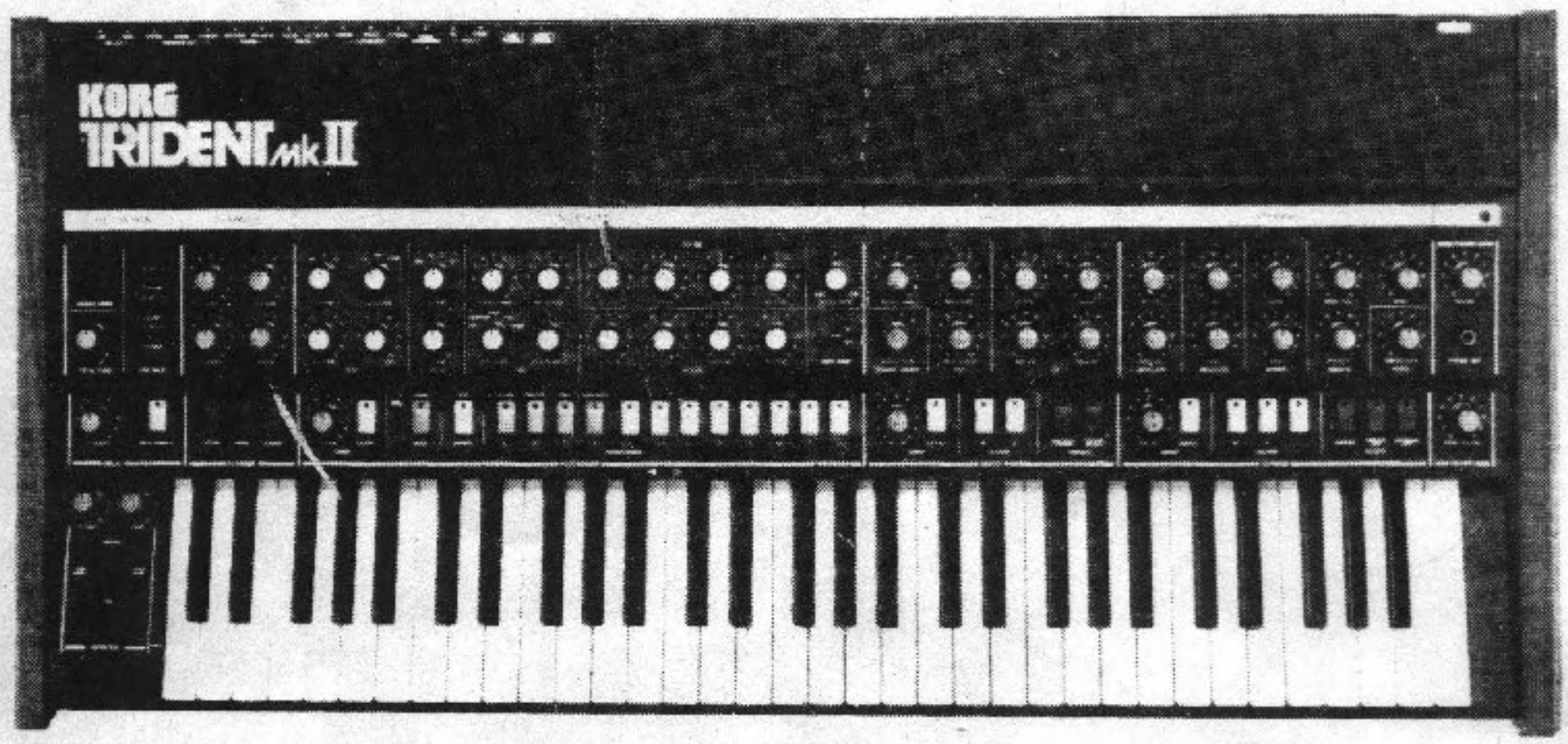

PERFORMING KEYBOARD SERVICE MANUAL TRIDENT mkII

CONTENTS

1. SPECIFICATIONS 1
2. STRUCTURAL DIAGRAM 2
3. BLOCK DIAGRAM 4
4. CIRCUIT DIAGRAM 5
5. PC BOARD 13
6. SEMI-FIXED RESISTORS POSITION DIAGRAM 22
7. INTER CHANGE LIST OF CONNECTOR TERMINAL NUMBER 23
8. TEST SETTING DIAGRAMS 25
9. CHECK AND ADJUSTMENT PROCEDURE 27
10. PARTS LIST 33

KLM-298, 299, 377

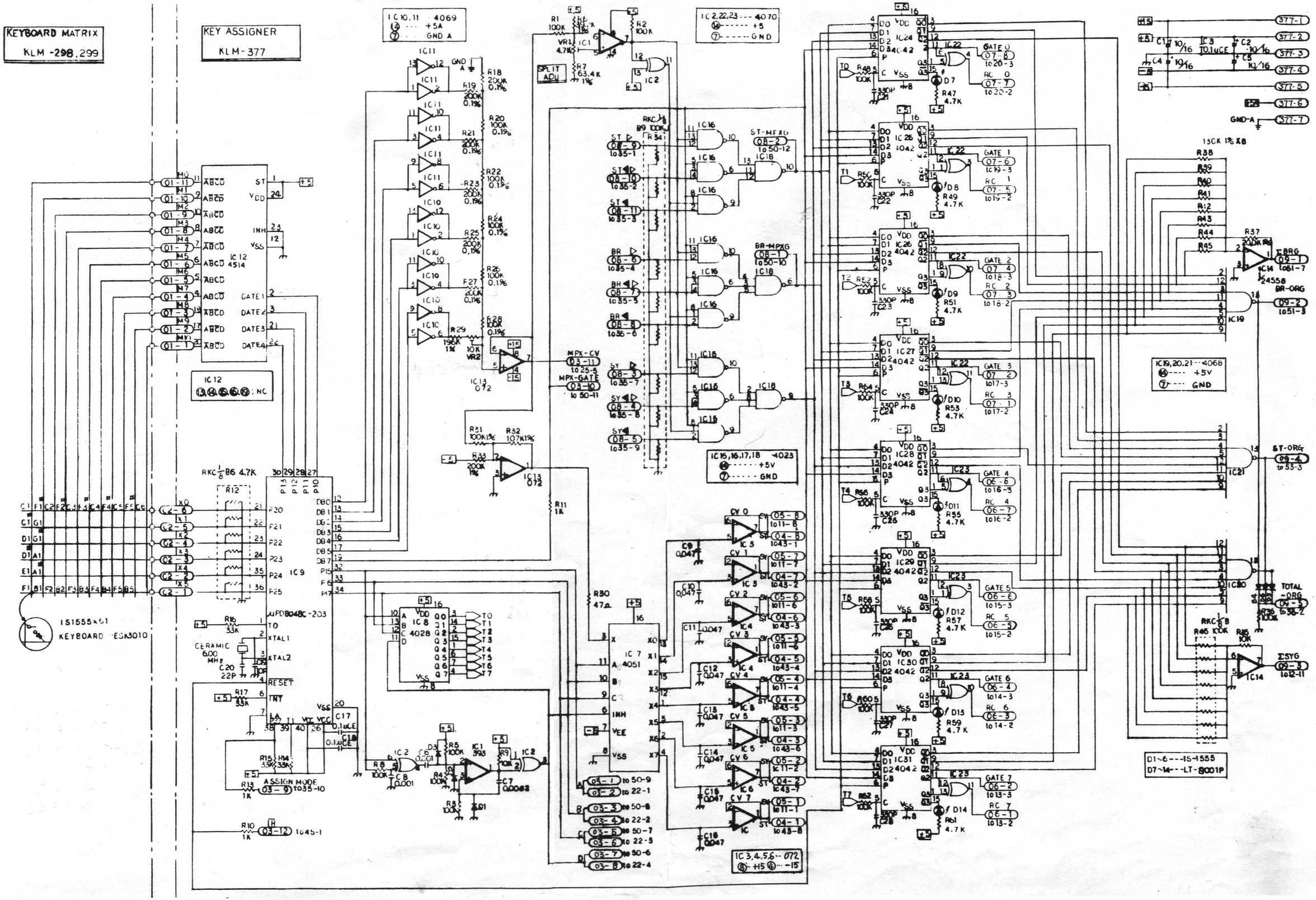

KLM-378 SYNTHESIZER

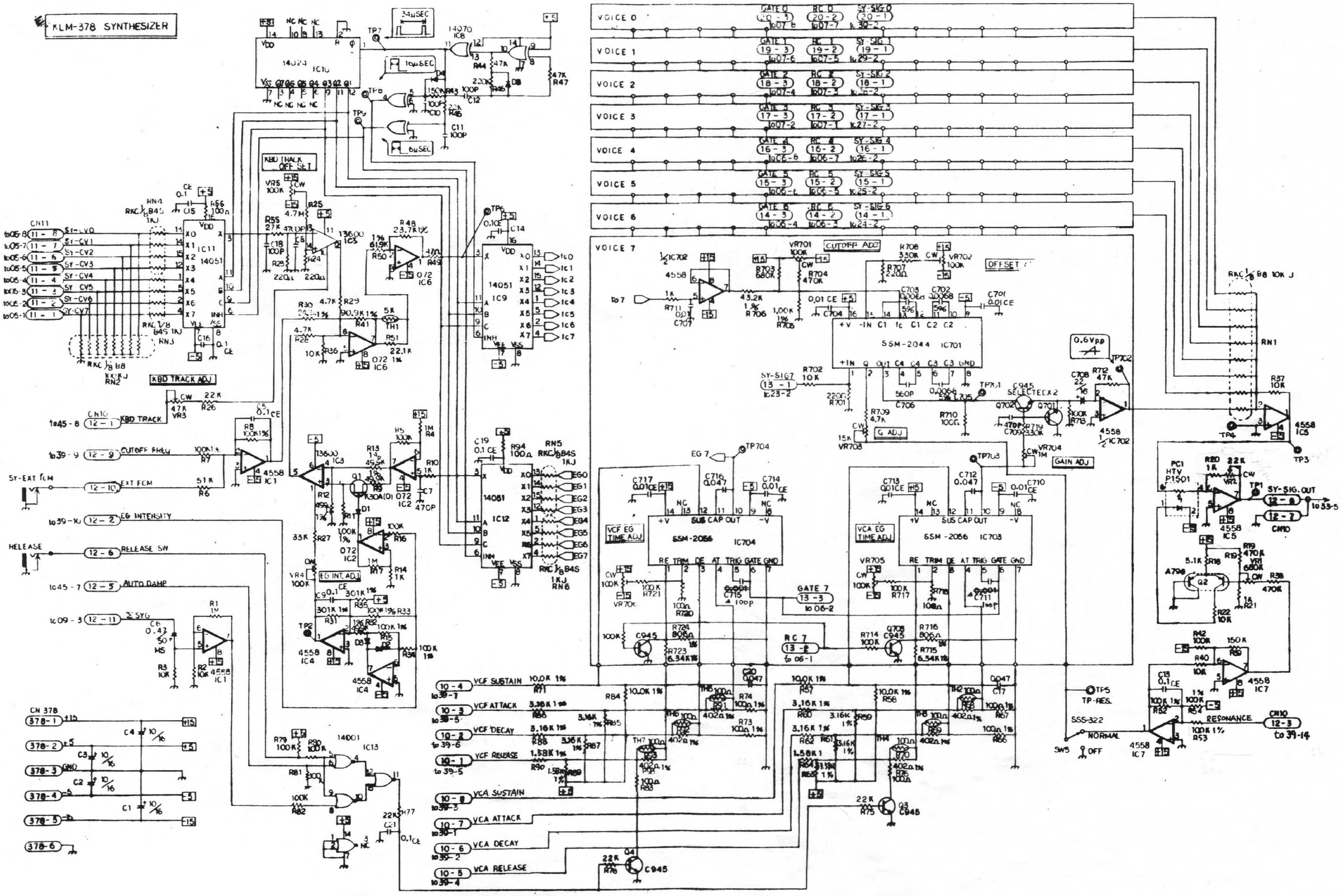

KLM-379 SIGNAL GENERATOR

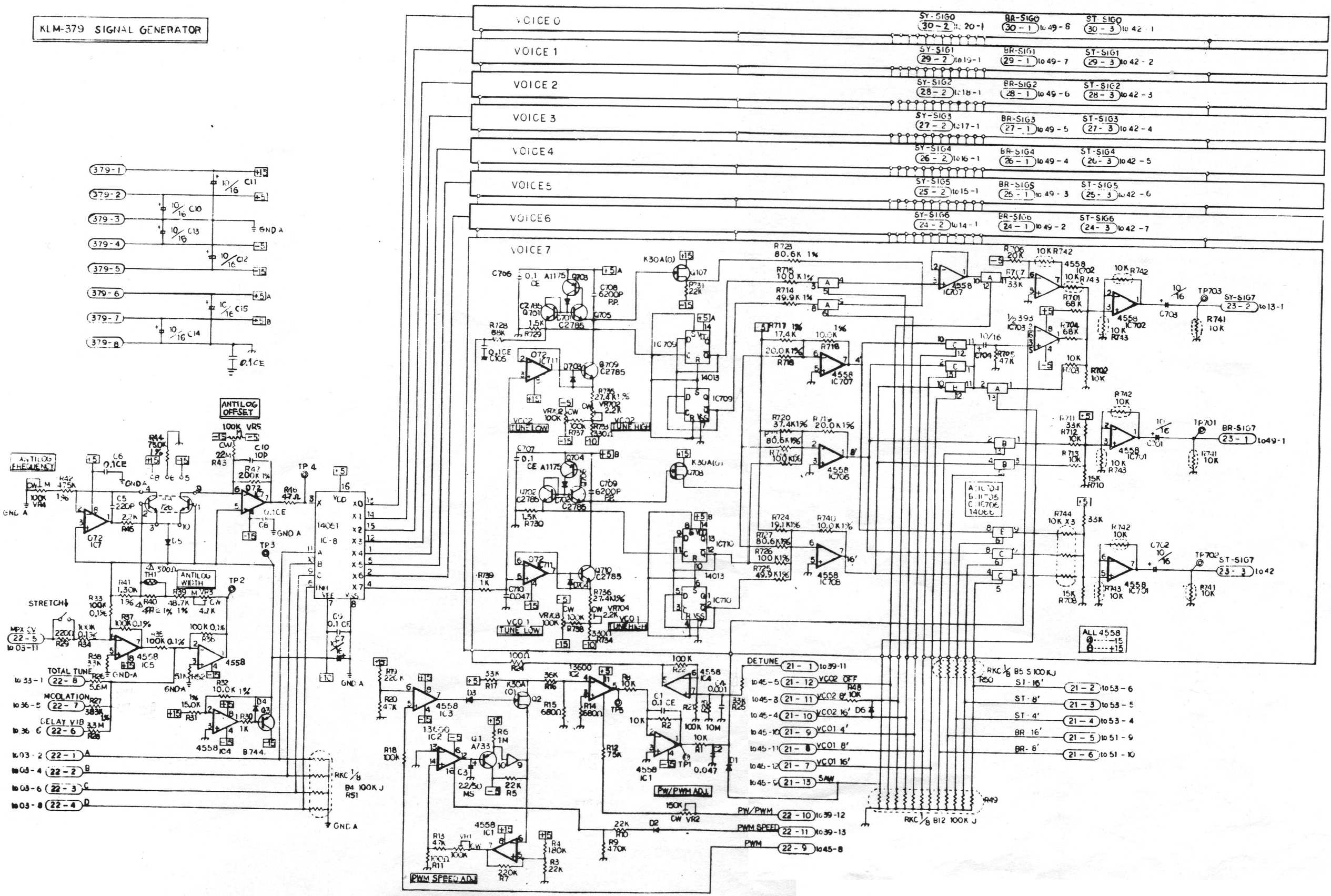

KLM-380 PROGRAMMER

(402)

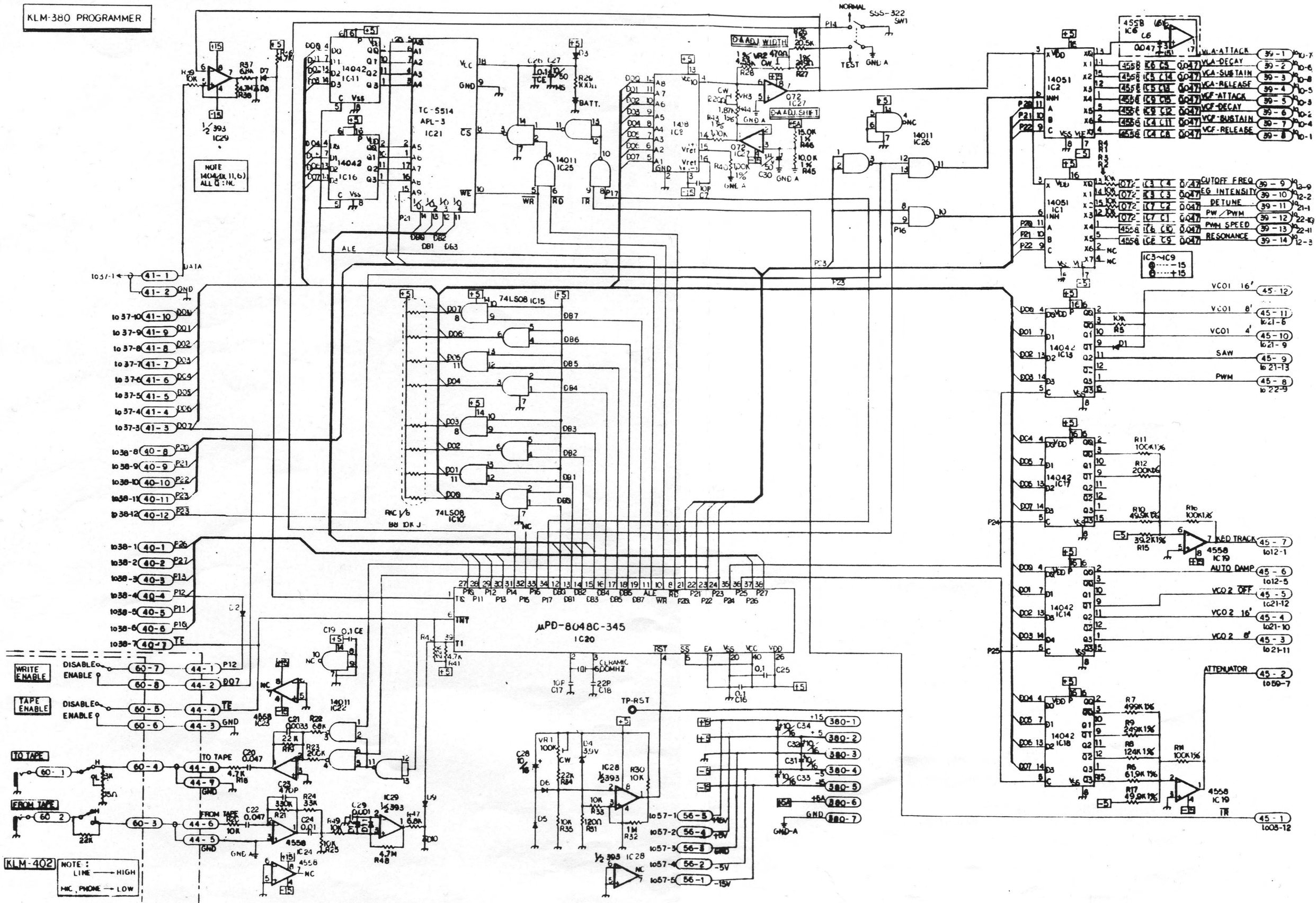

KLM-381 SYNTHESIZER PANEL

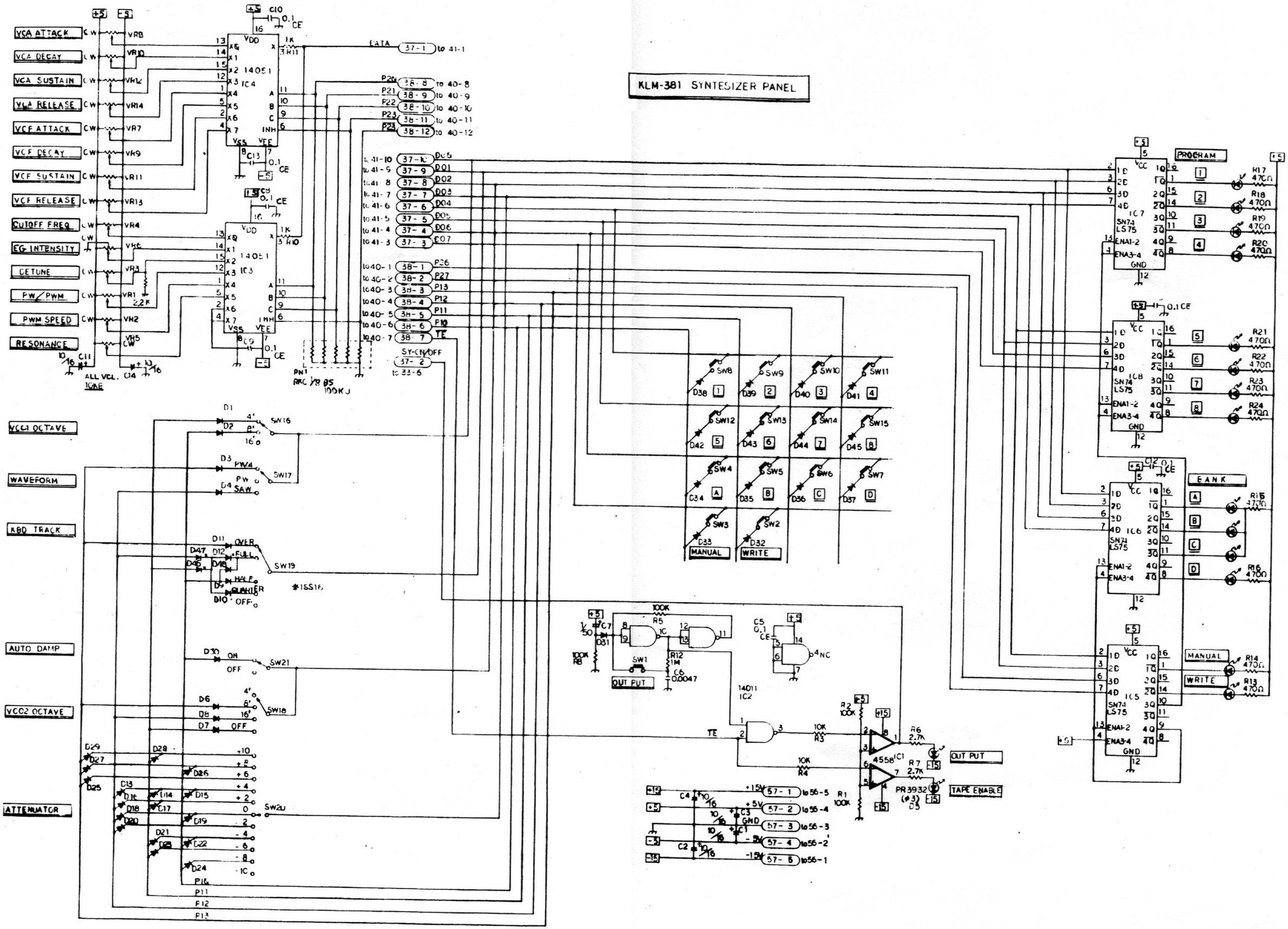

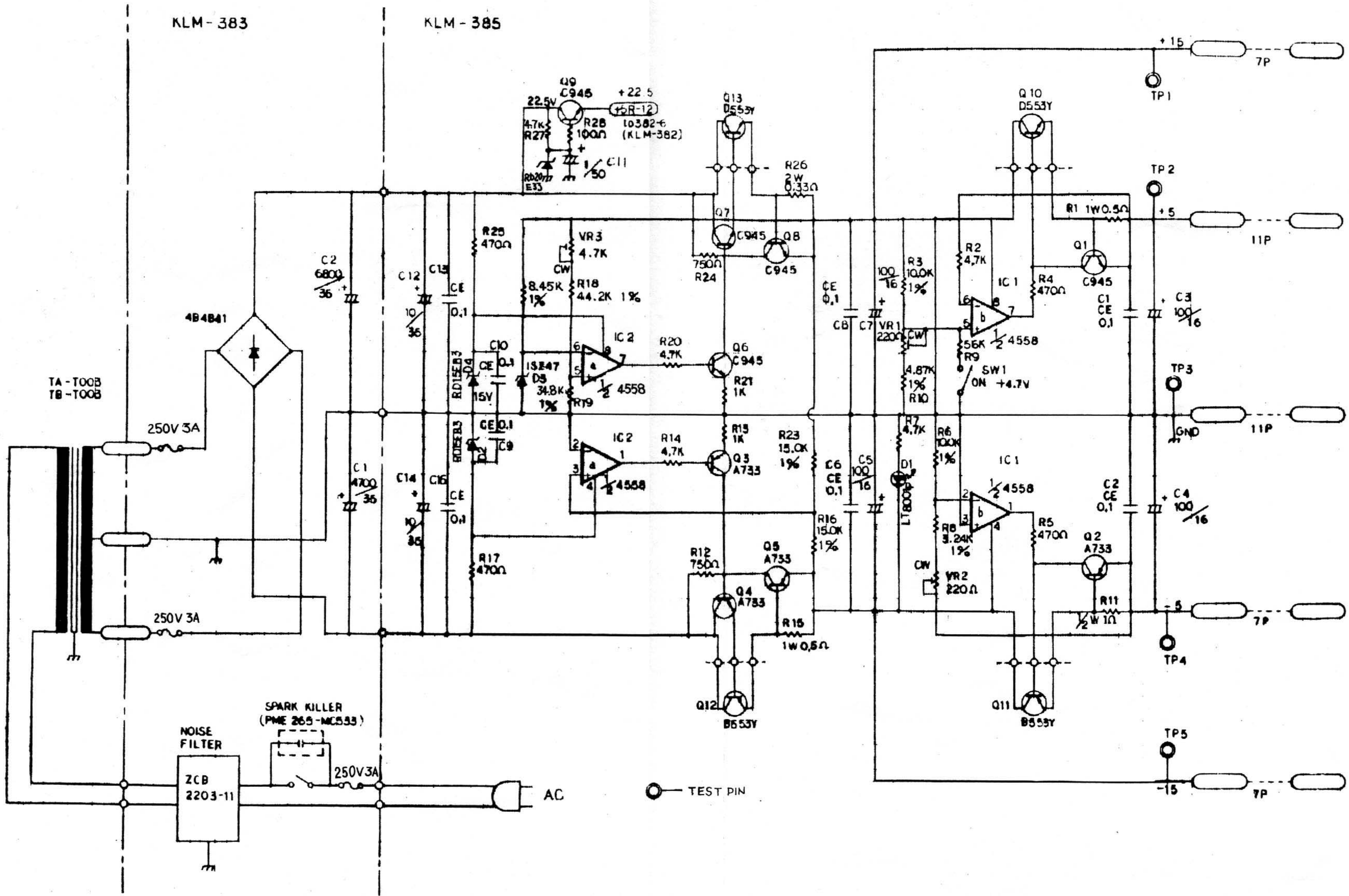
KLM-383
KLM-385
TA-T00B
TB-T00B
4B4B41
250V 3A
250V 3A
250V 3A
NOISE FILTER
ZCB 2203-11
SPARK KILLER (PME 265-MC533)
AC
TEST PIN
TP1
TP2
TP3
TP4
TP5
+15
+5
GND
-5
-15
7P
11P
11P
7P
7P
Q9 C945
Q13 D553Y
Q10 D553Y
Q7 C945
Q8 C945
Q6 C945
Q1 C945
Q3 A733
Q5 A733
Q4 A733
Q2 A733
Q12 B553Y
Q11 B553Y
IC 1 1/2 4558
IC 2 1/2 4558
SW1 ON +4.7V
VR1 220Ω
VR2 220Ω
VR3 4.7K
D1 LT800P
R26 2W 0.33Ω
R1 1W 0.5Ω
R15 1W 0.5Ω
R11 1/2W 1Ω
R23 15.0K 1%
R16 15.0K 1%
R3 10.0K 1%
R10 4.87K 1%
R18 44.2K 1%
R19 34.8K 1%
R25 470Ω
R17 470Ω
R24 750Ω
R12 750Ω
R20 4.7K
R14 4.7K
R21 1K
R15 1K
R2 4.7K
R4 470Ω
R5 470Ω
R6 100K 1%
R8 3.24K 1%
R7 4.7K
R9 5.6K
C1 CE 0.1
C2 CE 0.1
C3 100/16
C4 100/16
C5 100/16
C6 CE 0.1
C7 100/16
C8 CE 0.1
C2 6800/36
C1 4700/36
C11 1/50

KLM-384, 403

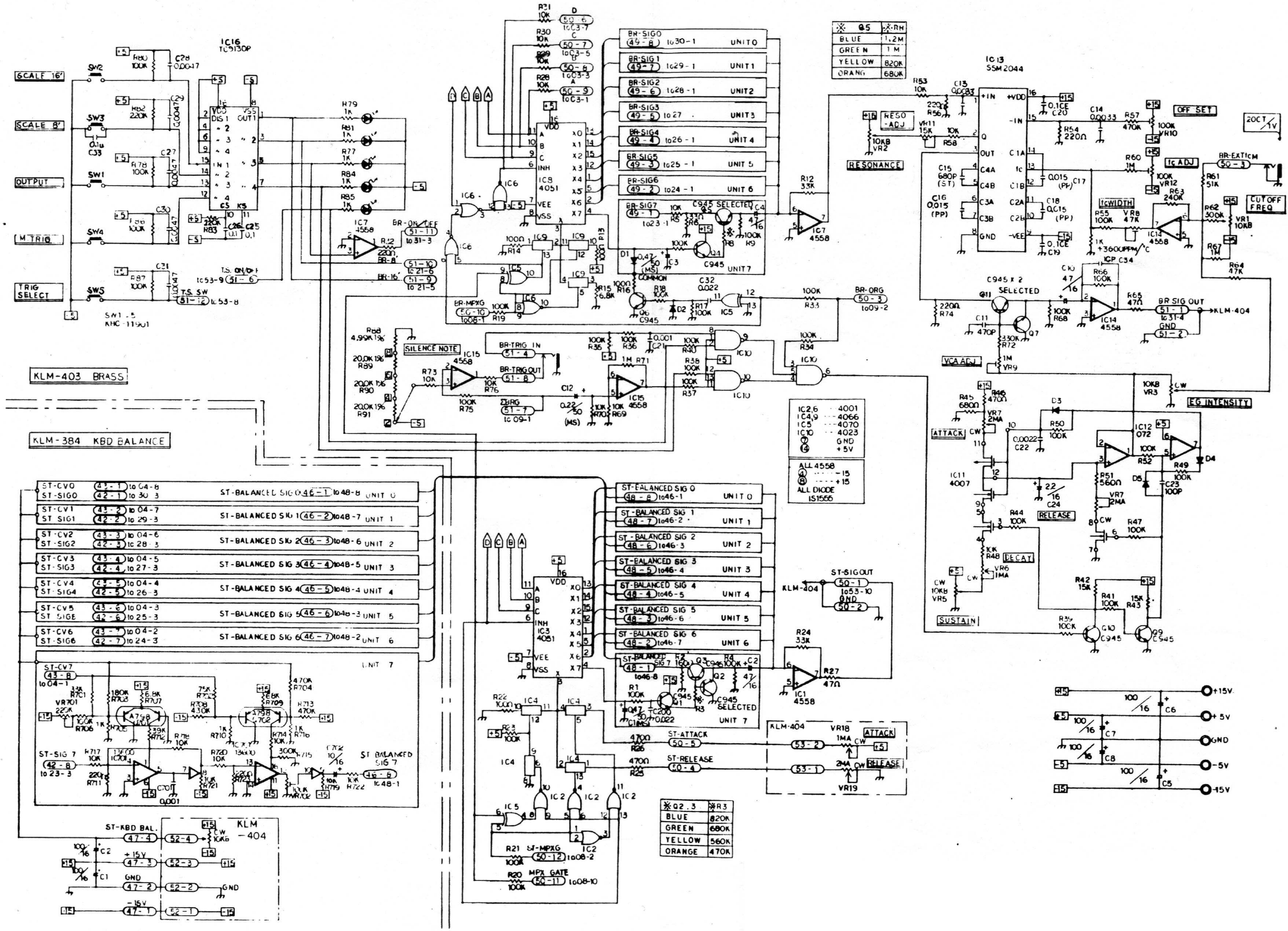
KLM-403 BRASS
KLM-384 KBD BALANCE
SCALE 16'
SCALE 8'
OUTPUT
M TRIG
TRIG SELECT
IC16 TC9130P
IC13 SSM2044
IC8 4051
IC3 4051
RESONANCE
OFF SET
IC ADJ
IC WIDTH
CUTOFF FREQ
VCA ADJ
EG INTENSITY
ATTACK
RELEASE
DECAY
SUSTAIN
SILENCE NOTE
BR-ON/OFF
BR-MPXG
BR-TRIG IN
BR-TRIG OUT
BR-ORG
BR SIG OUT
KLM-404
ST-SIGOUT
ST-ATTACK
ST-RELEASE
ST-MPXG
MPX GATE
ST-KBD BAL.
ST BALANCED SIG 7
UNIT 7
IC2,6 4001
IC4,9 4066
IC5 4070
IC10 4023
ALL 4558
ALL DIODE 1S1555
+15V
+5V
GND
-5V
-15V

KLM-404

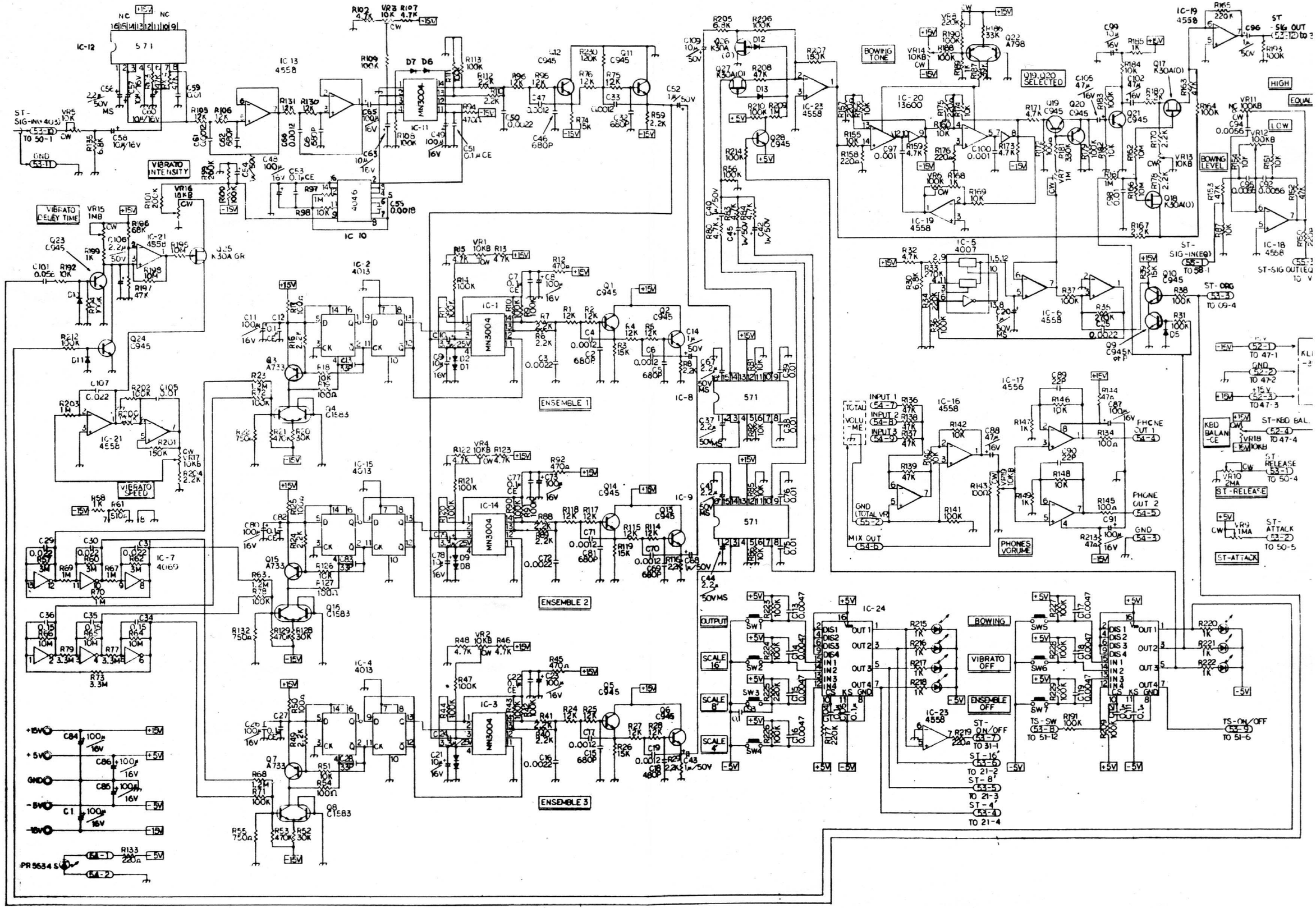
IC-12
571
IC 13
4558
IC-11
MN3004
IC 10
4046
VIBRATO INTENSITY
VIBRATO DELEY TIME
IC-21
4558
IC-2
4013
IC-1
MN3004
ENSEMBLE 1
IC-8
571
IC-15
4013
IC-14
MN3004
ENSEMBLE 2
IC-9
571
IC-7
4069
IC-4
4013
IC-3
MN3004
ENSEMBLE 3
VIBRATO SPEED
IC-20
13600
IC-19
4558
IC-23
4558
BOWING TONE
Q19,Q20 SELECTED
IC-5
4007
IC-6
4558
IC-17
4556
IC-16
4558
PHONES VOLUME
IC-24
OUTPUT
SCALE 16'
SCALE 8'
SCALE 4'
BOWING
VIBRATO OFF
ENSEMBLE OFF
HIGH
EQUAL
LOW
BOWING LEVEL
ST-SIG OUT
ST-SIG-IN(EQ)
ST-ORG
ST-KBD BAL.
ST-RELEASE
ST-ATTACK
PHONE OUT 1
PHONE OUT 2
TS-ON/OFF
TS-SW
ST-ON/OFF
ST-16'
ST-8'
ST-4'
PR5634 S

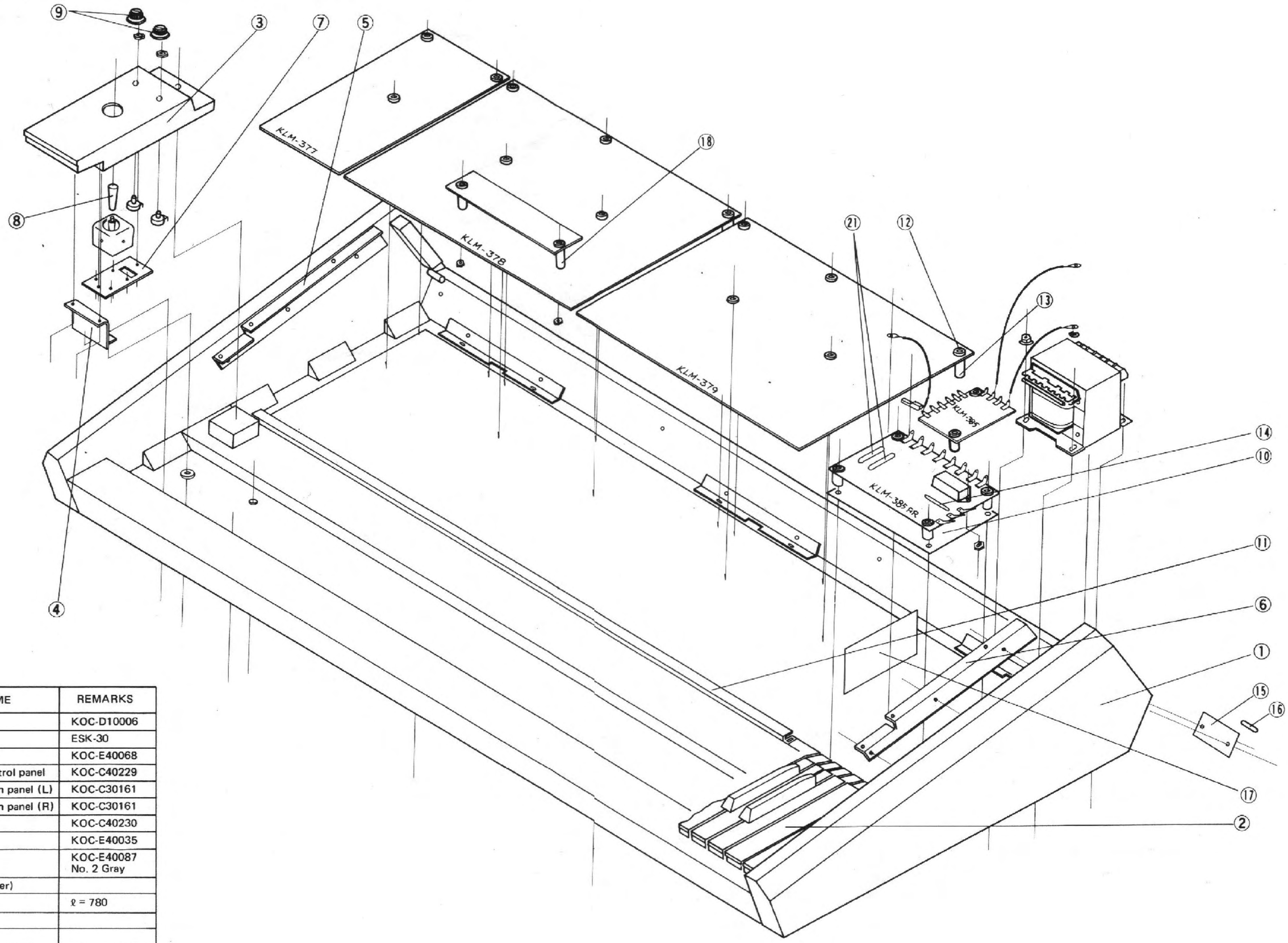

PART NO.	PARTS NAME	REMARKS
1	Wooden case	KOC-D10006
2	Key board	ESK-30
3	Control panel	KOC-E40068
4	Metal fitting of control panel	KOC-C40229
5	Metal fitting of main panel (L)	KOC-C30161
6	Metal fitting of main panel (R)	KOC-C30161
7	Joystic plate	KOC-C40230
8	Joystic VR knob	KOC-E40035
9	Rotary VR knob	KOC-E40087 No. 2 Gray
10	Shielding sheet (Fiber)	
11	PC board rail	ℓ = 780
12	Bushing (TB300)	
13	Bushing (TB301)	
14	Fuse seal	
15	Model number plate	KOC-C40144
16	Serial number seal	
17	Fuse caution seal	KOC-F30013
18	Bushing (TA320)	

2. STRUCTURAL DIAGRAM

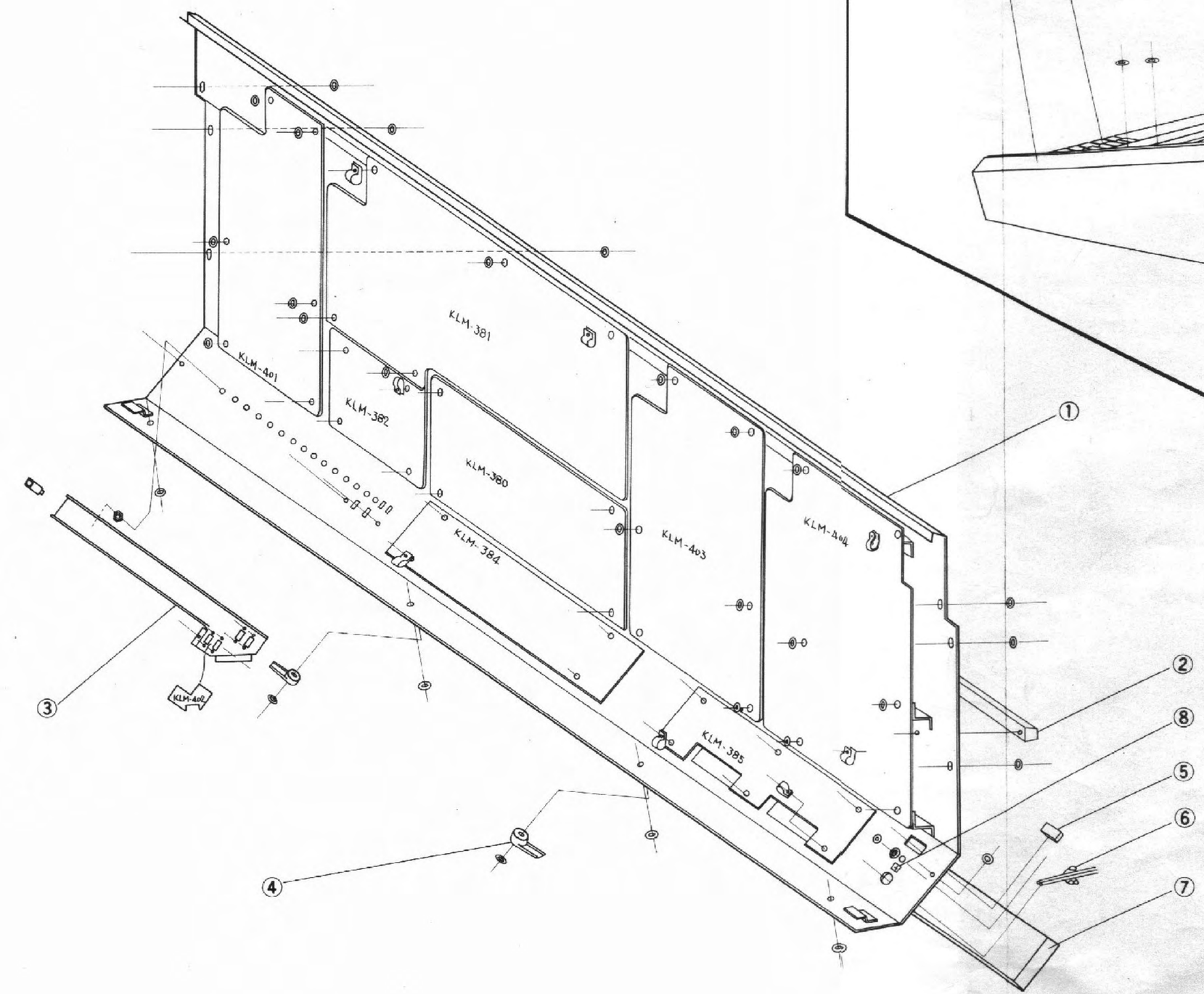

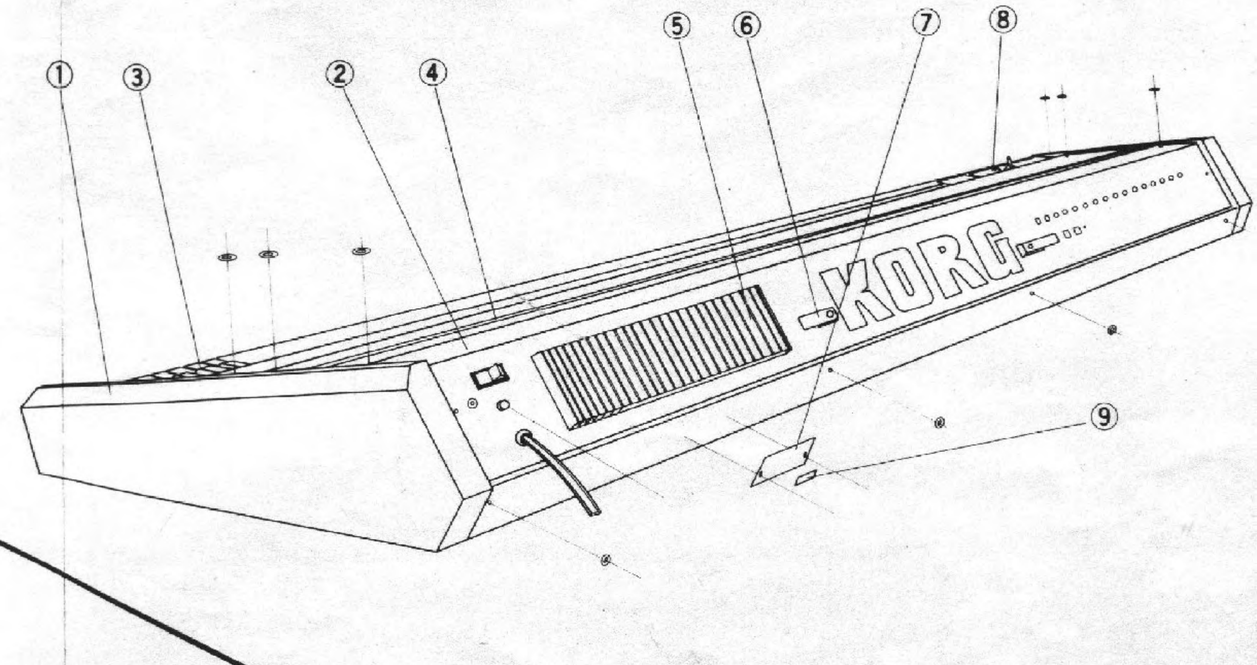

PART NO.	PARTS NAME	REMARKS
1	Wooden case	KOC-D10006
2	Main panel	KOC-C10004
3	Keyboard	ESK-30
4	Music stand	KOC-C30162
5	Radiator	KOC-C30189
6	Cord Stopper	KOC-E40099
7	Model number plate	KOC-C40144
8	Control panel	KOC-E40068
9	Serial number seal	KOC-F40050

PART NO.	PARTS NAME	REMARKS
1	Main panel	KOC-C10004
2	Music stand	KOC-C30162
3	Phone jack plate	KOC-C20113
4	Cord stopper	KOC-E40099
5	Power SW	
6	Bushing	
7	Radiator	KOC-C30189
8	GND seal	

3. BLOCK DIAGRAM

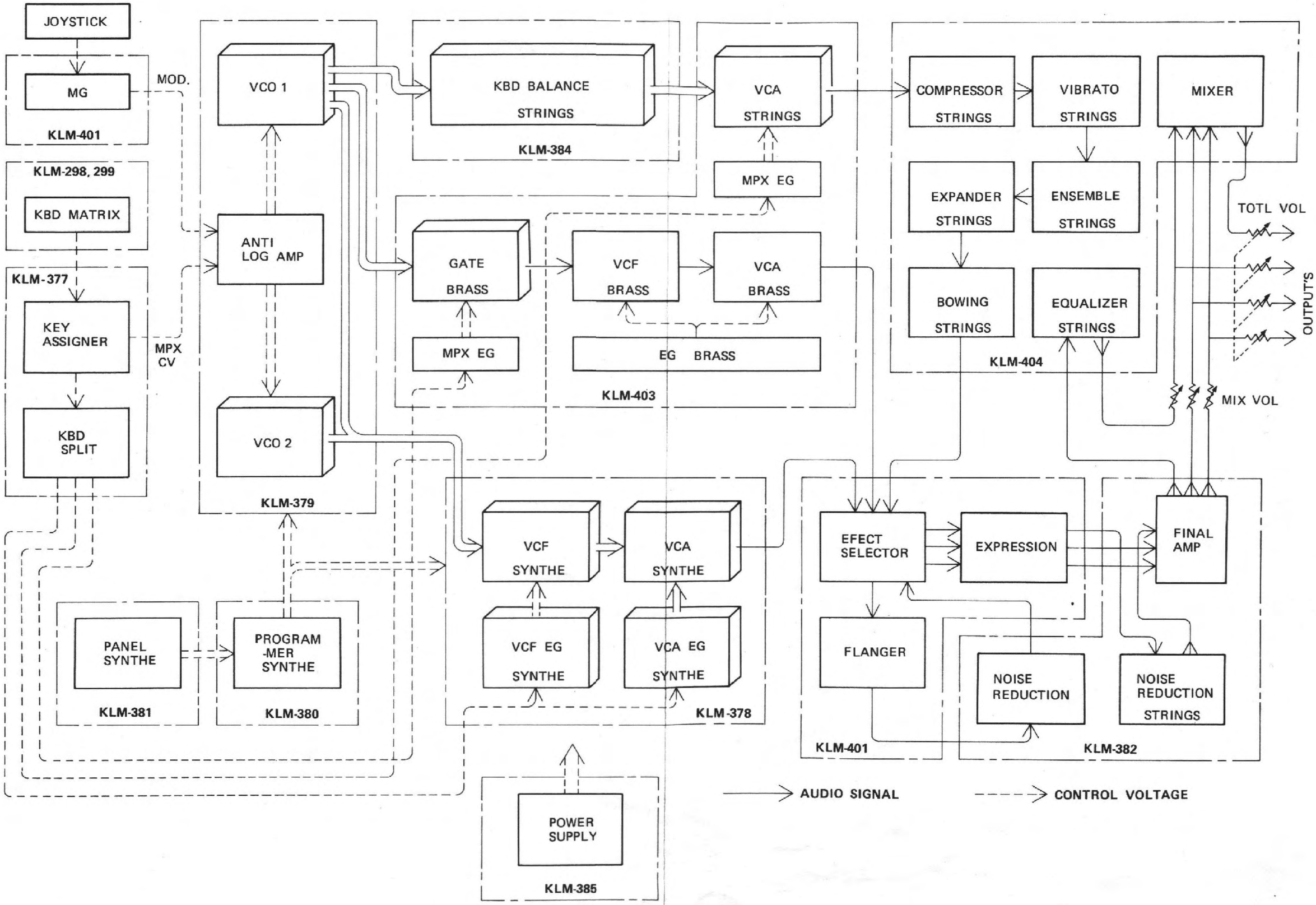

1. SPECIFICATIONS

KEYBOARD ..... • C–C, 61 Keys, 8 voices

SYNTHESIZER SECTION (Program and edit functions are possible for items marked *)

VCO-1* .....
- Octave (16', 8', 4')
- Waveform (⋀ , PW, PWM)
- PW/PWM Intensity
- PWM Speed

VCO-2* .....
- Scale (Off, 16', 8', 4')
- Waveform (⋀)
- Detune

VCF* .....
- Cut-off Frequency
- Resonance
- EG Intensity
- KBD Track (Off 0%, Quarter 25%, Half 50%, Full 100%, Over < 150%)

VCF EG* .....
- Attack
- Decay
- Sustain
- Release

VCA* ..... • Attenuator (–10dB ~ +10dB)

VCA EG* .....
- Attack
- Decay
- Sustain
- Release

VCA* ..... • Attenuator (–10dB ~ +10dB)

AUTO DAMP ..... • ON/OFF

PROGRAMMER (x32) .....
- Program Select (1–8)
- Bank Select (A, B, C, D)
- Manual
- Write

TAPE INTERFACE .....
- To Tape
- From Tape
- Verify
- Error/Cancel
- Write Enable (Enable/Disable)
- Tape Enable (Enable/Disable)
- Tape Indicator x2 (Found, Loading)

MIXER .....
- Output (On/Off)
- Volume

BRASS SECTION

OCTAVE (x2) ..... • 16', 8'

VCF .....
- Cut-off Frequency
- Resonance
- EG Intensity

ENVELOPE GENERATOR .....
- Attack
- Decay
- Sustain
- Release

TRIGGER .....
- Multiple Trigger (On/Off)
- Trigger Select (On/Off)
- Silence Note (2, 4, 6, 8)

MIXER .....
- Output (On/Off)
- Volume

STRINGS SECTION

OCTAVE (x3) ..... • 16', 8', 4'

ENVELOPE GENERATOR .....
- Attack
- Release

EQUALIZER .....
- High
- Low

EFFECT .....
- Bowing (On/Off, Level, Tone)
- Vibrato (On/Off, Delay Time, Intensity, Speed)
- Ensemble (On/Off)

FILTER ..... • KBD Balance

MIXER .....
- Output (On/Off)
- Volume

TOTAL CONTROL SECTION

KEY ASSIGNOR ..... • Assign Mode (1, 2)

KEYBOARD SPLIT .....
- Synthe (L, L+H, H)
- Brass (L, L+H, H)
- Strings (L, L+H, H)

PITCH CONTROL ..... • Tune (±100 Cents)

VIBRATO .....
- Delay Vibrato (On/Off)
- Intensity

JOY STICK .....
- Pitch Bend (X-Axis)
- Vibrato Depth/Trill Depth (Y-Axis)
- Intensity
- Speed

FLANGER .....
- Select (Synthe, Brass, Strings)
- Manual
- Intensity
- Feedback
- Speed

VOLUME CONTROL .....
- Total Volume
- Headphone Volume

POWER SWITCH ..... • Power (On/Off)

INPUTS & OUTPUTS

INPUTS .....
- Synthe VCF fcM In (–5V ~ +5V)
- Synthe Release (⊤GND)
- Brass VCF fcM In (–5V ~ +5V)
- Brass Trigger In (⊤GND)
- Separate Expression x3 (0 ~ +5V)
- Total Expression (0 ~ +5V)
- From Tape (With High/Low Switch)

OUTPUTS .....
- Mix Outputs (High, Low)
- Separate Outputs (Synthe, Brass, Strings)
- Headphone Output (Stereo)
- To Tape (With High/Low Switch)

DIMENSIONS ..... • 1012(W) x 542(D) x 173(H) mm

WEIGHT ..... • 23.5 kg

ACCESSORIES .....
- Connection Cord
- Dust Cover
- Foot Switch S-1
- Memory Cassette

POWER CONSUMPTION .....
- Voltage (Local Voltage, 50/60 Hz)
- Wattage (53 W)

KLM-381 SYNTHESIZER PANEL

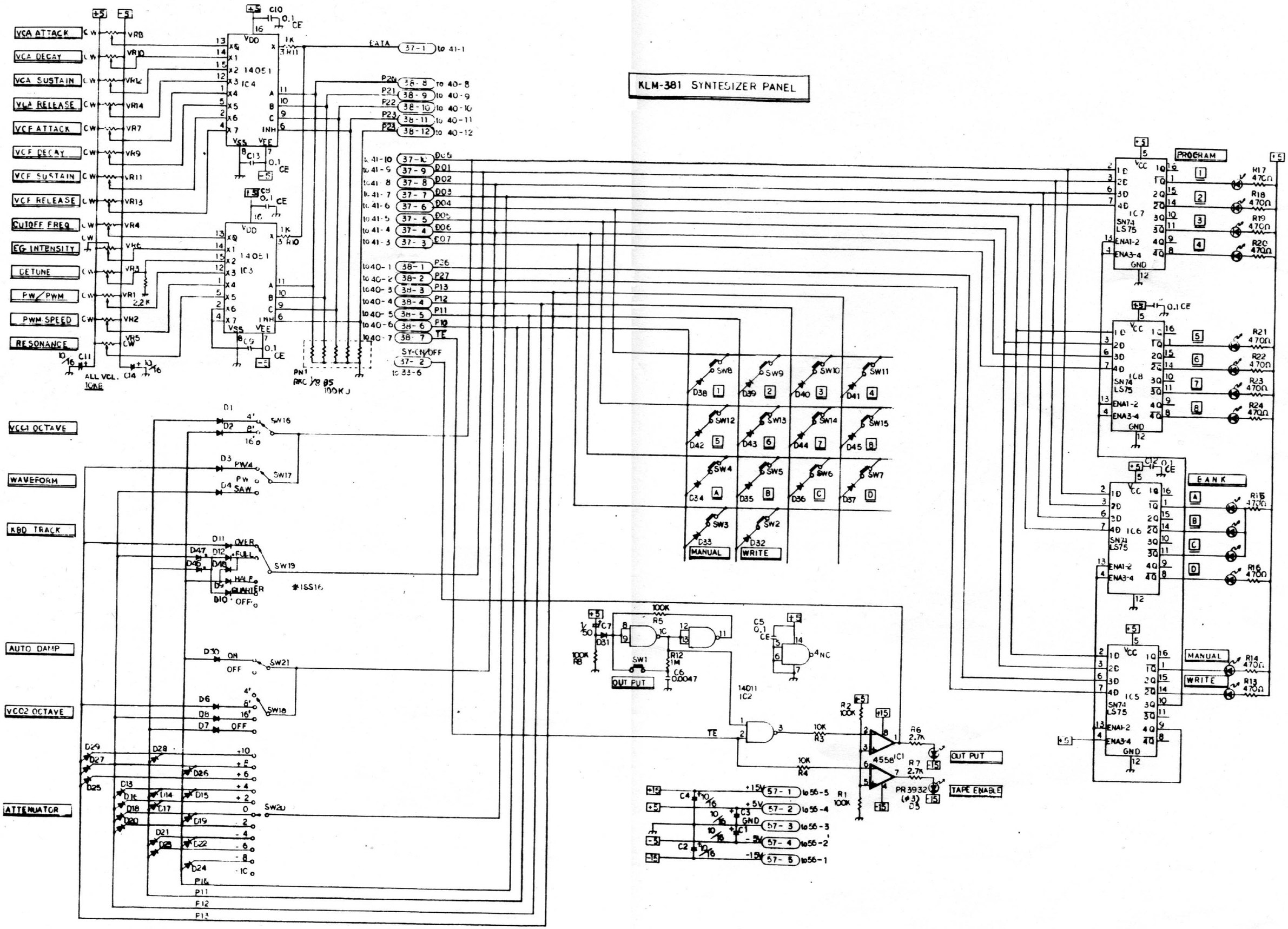

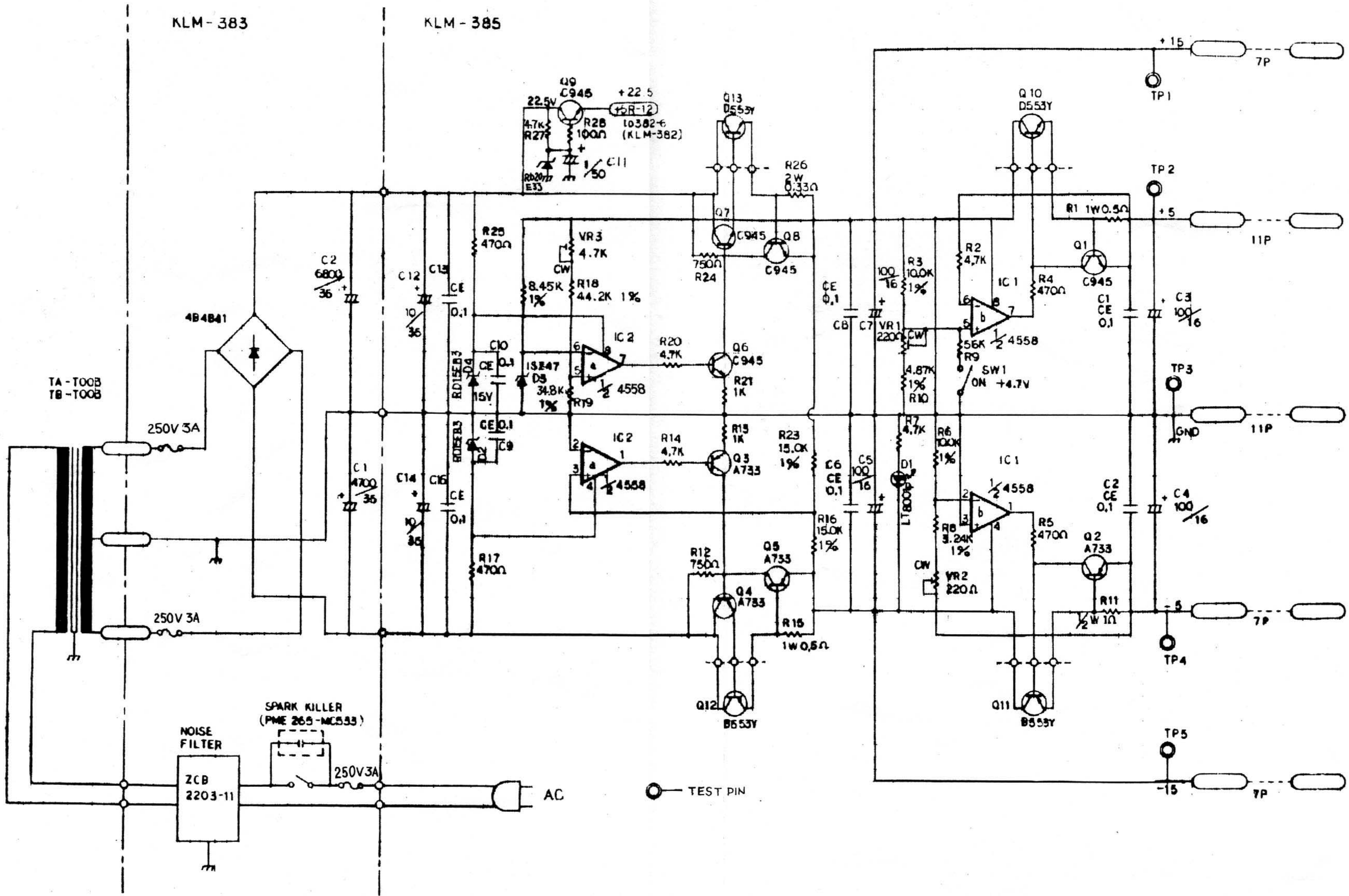
KLM-383
KLM-385
TA-T00B
TB-T00B
4B4B41
250V 3A
250V 3A
250V 3A
NOISE FILTER
ZCB 2203-11
SPARK KILLER (PME 265-MC533)
AC
TEST PIN
TP1
TP2
TP3
TP4
TP5
+15
+5
GND
-5
-15
7P
11P
11P
7P
7P
Q9 C945
Q13 D553Y
Q10 D553Y
Q7 C945
Q8 C945
Q6 C945
Q1 C945
Q3 A733
Q5 A733
Q4 A733
Q2 A733
Q12 B553Y
Q11 B553Y
IC 1 1/2 4558
IC 2 1/2 4558
SW1 ON +4.7V
VR1 220Ω
VR2 220Ω
VR3 4.7K
D1 LT800P
R26 2W 0.33Ω
R1 1W 0.5Ω
R15 1W 0.5Ω
R11 1/2W 1Ω
R23 15.0K 1%
R16 15.0K 1%
R3 10.0K 1%
R10 4.87K 1%
R18 44.2K 1%
R19 34.8K 1%
R25 470Ω
R17 470Ω
R24 750Ω
R12 750Ω
R20 4.7K
R14 4.7K
R21 1K
R15 1K
R2 4.7K
R4 470Ω
R5 470Ω
R6 100K 1%
R8 3.24K 1%
R7 4.7K
R9 5.6K
C1 CE 0.1
C2 CE 0.1
C3 100/16
C4 100/16
C5 100/16
C6 CE 0.1
C7 100/16
C8 CE 0.1
C2 6800/36
C1 4700/36
C11 1/50

KLM-384, 403

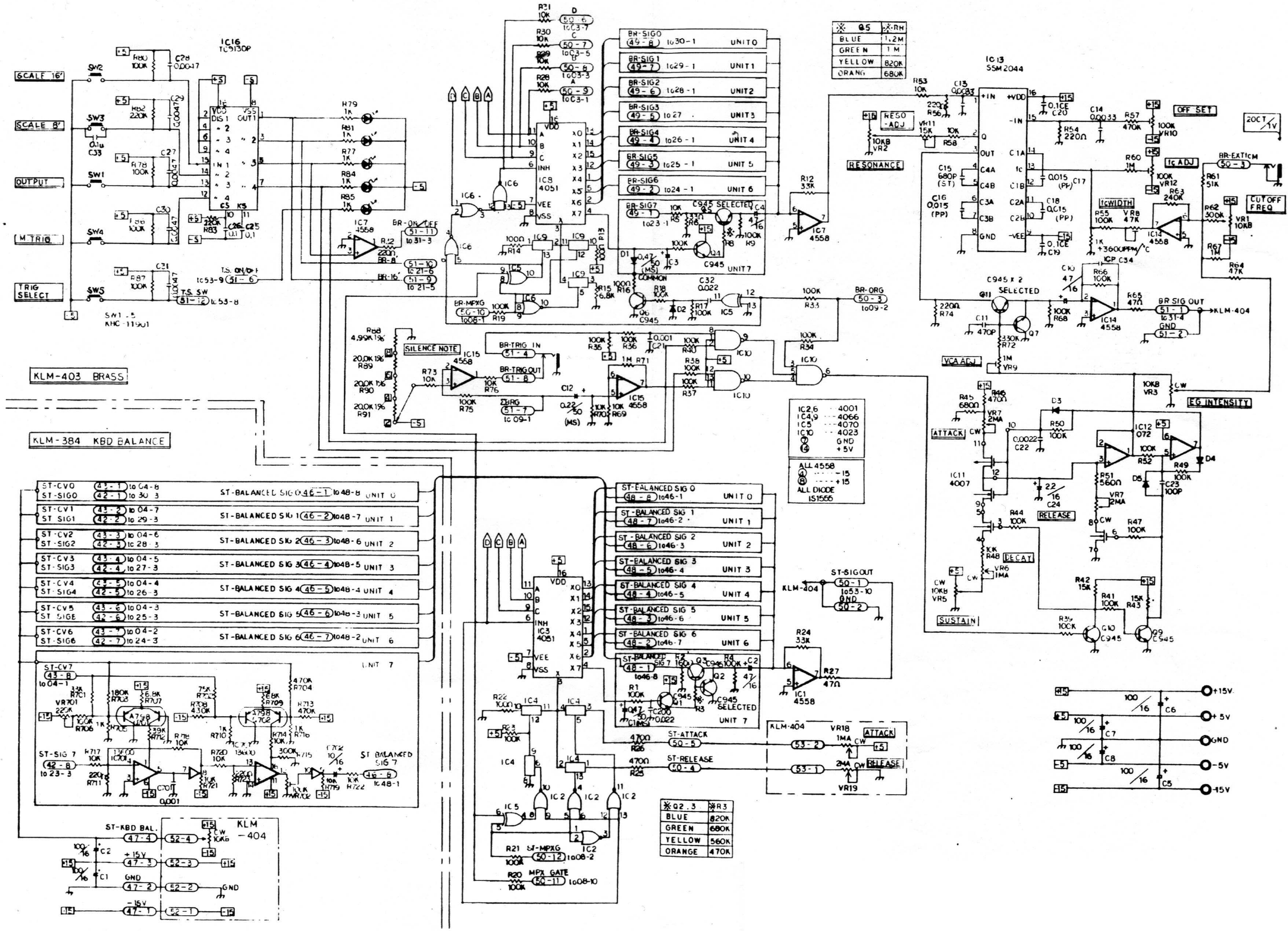
KLM-403 BRASS
KLM-384 KBD BALANCE
SCALE 16'
SCALE 8'
OUTPUT
M TRIG
TRIG SELECT
IC16 TC9130P
IC13 SSM2044
IC8 4051
IC3 4051
RESONANCE
OFF SET
IC ADJ
IC WIDTH
CUTOFF FREQ
VCA ADJ
EG INTENSITY
ATTACK
RELEASE
DECAY
SUSTAIN
SILENCE NOTE
BR-ON/OFF
BR-MPXG
BR-TRIG IN
BR-TRIG OUT
BR-ORG
BR SIG OUT
KLM-404
ST-SIGOUT
ST-ATTACK
ST-RELEASE
ST-MPXG
MPX GATE
ST-KBD BAL.
ST BALANCED SIG 7
UNIT 7
IC2,6 4001
IC4,9 4066
IC5 4070
IC10 4023
ALL 4558
ALL DIODE 1S1555
+15V
+5V
GND
-5V
-15V

KLM-404

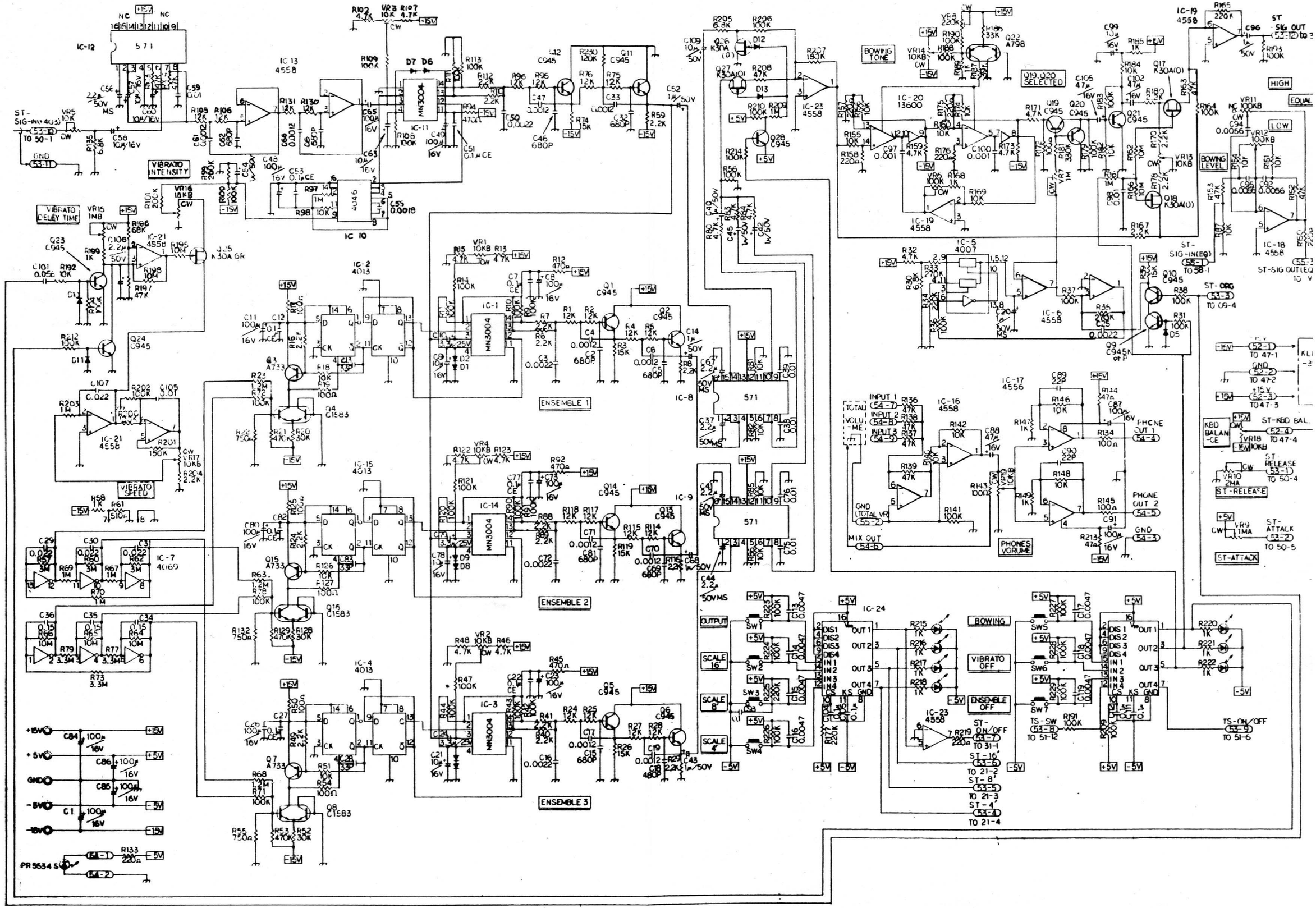
IC-12
571
IC 13
4558
IC-11
MN3004
IC 10
4046
VIBRATO INTENSITY
VIBRATO DELEY TIME
IC-21
4558
IC-2
4013
IC-1
MN3004
ENSEMBLE 1
IC-8
571
IC-15
4013
IC-14
MN3004
ENSEMBLE 2
IC-9
571
IC-7
4069
IC-4
4013
IC-3
MN3004
ENSEMBLE 3
VIBRATO SPEED
IC-20
13600
IC-19
4558
IC-23
4558
BOWING TONE
Q19,Q20 SELECTED
IC-5
4007
IC-6
4558
IC-17
4556
IC-16
4558
PHONES VOLUME
IC-24
OUTPUT
SCALE 16'
SCALE 8'
SCALE 4'
BOWING
VIBRATO OFF
ENSEMBLE OFF
HIGH
EQUAL
LOW
BOWING LEVEL
ST-SIG OUT
ST-SIG-IN(EQ)
ST-ORG
ST-KBD BAL.
ST-RELEASE
ST-ATTACK
PHONE OUT 1
PHONE OUT 2
TS-ON/OFF
TS-SW
ST-ON/OFF
ST-16'
ST-8'
ST-4'
PR5634 S